SCAN FOR THE LATEST VERSION

INSPIRE MK2 INBUILT AND FREESTANDING

ALL FLUE CONFIGURATIONS

INSTALLATION AND OPERATIONS MANUAL

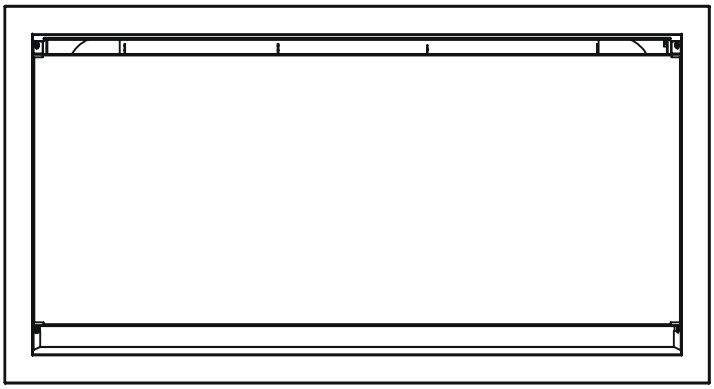

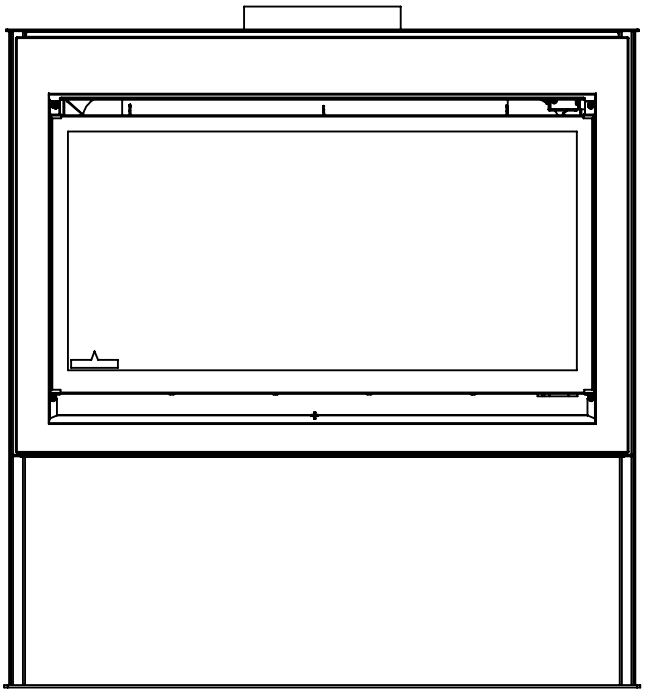

The Real Flame Inspire space heater is suitable to be installed into a frame out installation. Designed to operate on Natural gas and LPG

Approval no. GMK 10528

Consumer safety information: please read this manual before installing and operating this appliance. Failure to follow these instructions may result in a possible fire hazard and/or injury and will void the warranty.

Version 4.2

REAL FLAME

CONTENTS

WELCOME 3
SPECIFICATIONS 5

OPERATION INSTRUCTIONS
USER INSTRUCTIONS 9
TROUBLESHOOTING FOR YOUR FIREPLACE 13

INSTALLATION INSTRUCTIONS
UNIT DIMENSIONS 15
MINIMUM FRAMEOUT DIMENSIONS 16
INSTALLING ELECTRIC EQUIPMENT ABOVE FIREPLACE 19
INSTALLING FIREPLACE IN A SOFFIT DESIGN 20

FREESTANDING INSTRUCTIONS 22

INSTALLATION INSTRUCTIONS 34

0-5M FLUE CONFIGURATION
EXTERNAL WALL MOUNTED FAN MODULE INSTALLATION 36
ROOFTOP TERMINATION WITH EXTERNAL MOTOR 39

5-8.5M INSULATED FLUE CONFIGURATION
EXTERNAL WALL MOUNTED FAN MODULE INSTALLATION 44
ROOFTOP TERMINATION WITH EXTERNAL MOTOR 48

COMMISSIONING PROCEDURE 53
MEDIA INSTALLATION 54
CONVERSION DETAILS 54
PARTS LIST 78
APPENDIX 1- FLUE TERMINATION 79
APPENDIX 2- WIRING DIAGRAMS 81
WARRANTY INFORMATION 82

WELCOME

Congratulations on your selection of the elegant Real Flame Inspire fireplace. Enjoy mesmerising flame patterns in a truly efficient gas fireplace. Designed and developed in Australia for Australia, this fireplace is sure to be the centre piece of your home . Difference sizes for each design inspiration. We hope you create endless memories in front of this warm and cosy fireplace.

Read this manual before attempting to install or use the fireplace. Always comply with the warnings and safety instructions contained in this manual to prevent injury or property damage. When using the fireplace basic precautions should always be followed to reduce the risk of fire and injury.

INSTALLATION NOTICE

The installation of this appliance is only to be carried out by an authorised person in accordance with the Manufacturer's Instructions, local gas fitting regulations, AS/NZS5601 installation code for gas burning appliances and any other relevant statutory regulations.

In all cases the installation of this appliance shall meet the requirements as set out in AS/NZS5601

Do not install in a fireplace as a Type 1 installation. Not intended as a fireplace insert.

NOTE: A slight smell may be apparent for the first few hours of use. This is due to the heat resistant paint curing. It is recommended to open windows in the room for the first lighting of the fire. In some instances a slight discolouration may occur inside the firebox. This is a normal condition and is not covered by warranty.

WARNING

The Inspire space heater has a primary safety glass fitted in front of the glass door. This safety glass is fitted to this appliance to reduce the risk of injury from burns and at no time should this glass be permanently removed.

For protection of young children or the infirm, a secondary guard is required.

The appliance is not intended for use by persons (including children) with reduced physical, sensory or mental capabilities, or lack of experience and knowledge, unless they have been given supervision or instruction concerning use of the appliance by a person responsible for their safety. Children should be supervised to ensure that they do not play with the appliance.
The glass panel gets extremely hot! Precaution should be taken and young children supervised at all times when the heater is operating.

"WARNING - Transit material such as cardboard packaging, pallet, plastic wrap, glass packaging warning labels and burner media protection must be removed prior to use."

Do not place articles on or against this appliance.
Do not use or store flammable materials in or near this appliance.
Do not spray aerosols in the vicinity of this appliance whilst it is in operation.
Care must be taken to ensure that any return air register or exhaust system does not adversely affect the operation of the appliance or draught of chimney or flue.
Do not modify this appliance.

SERVICING

It is recommended you service your gas fire every 2 years as a minimum.

CORD REPLACEMENT

Electrical cord replacement must be undertaken by qualified and trained personnel only.

NOTE

Appliance is designed to operate with luminous flames. May exhibit slight carbon deposit.

A byproduct of burning gas is condensation. This occurs at the star when the fire turns on and heats up the firebox. This is a normal process and will accumulate over time and is not covered by warranty. Service technicians will clean glass as part of a service call which should be performed every two years.

INSTALLATIONS OF SPACE HEATERS IN EXTREME ENVIRONMENTS

Note – The installation of the appliance may not be suitable for use, may have a reduced performance or may have intermittent operation in some extreme environments.

Extreme environments may be areas or high wind (Approx 65km/hr or higher) including high gust areas, high altitudes, alpine or snow areas, extreme frost areas, coastal areas, multistory or high rise buildings, exposed alfresco areas and extreme weather events.

The appliance has been designed and tested to ensure it meets the operational requirements of the Australian standards AS/NZS5263.1.3 Gas space heaters and will provide reliable operation in most conditions while maintaining appliance safety in all conditions.

The installation into an extreme environment may exceed the working limits of the appliance and the appliance may have a reduced output, suffer infrequent stop starting, fail to operate or have a reduced life expectancy when installed in a corrosive environment.
Finishes in some appliances may also not be suitable for semi exposed or corrosive environments.
When installed as per instructions the appliance will continue to operate safely or will shut down in a safe manner.

Non operation or reduced life expectancy due to extreme conditions is not a failure of the appliance and is not a warranty defect.

Glen Dimplex Australia must be consulted prior to any installation into an extreme environment.

SPECIFICATIONS OF INSPIRE 700

Appliance Type	High Efficiency Gas Fireplace	
Star Rating	Up to 4.1 stars	
Maximum Heating Output	Up to 5.1 kW	
Heats Room up to	70m^2 approx.	
Gas Type	Natural Gas	LPG
Gas Input	20 High/ 14 Low	20 High/ 16 Low
Operating Pressure (TPP)	0.88 kPa High/0.40 kPa Low	2.48 kPa High/1.58 kPa Low
Max - Min Inlet Pressure Range	1.13kPa - 3.45kPa	2.75kPa - 3.45kPa
Injector Size	1 X 2.06 mm	1 X 1.25 mm
Aeration Settings		
Media Setup	Natural Gas	LPG
Driftwood	Ø12 + 2 x Ø4.0	Ø16 + 6 x Ø4.0
Snow Gum Media	Ø12 + 2 x Ø4.0	Ø16 + 6 x Ø4.0

*Subject to model and flue configuration

NOTE - Appliance is supplied with default aeration setting for the Snowgum media. If fitting Driftwood media, aeration setting will need to change as per size and specification.

SPECIFICATIONS OF INSPIRE 900

Appliance Type	High Efficiency Gas Fireplace	
Star Rating	Up to 4.1 stars	
Maximum Heating Output	Up to 5.4 kW	
Heats Room up to	75m^2 approx.	
Gas Type	Natural Gas	LPG
Gas Input	25 High/ 18.5 Low	25 High/ 20 Low
Operating Pressure (TPP)	0.88 kPa High/0.40 kPa Low	2.48 kPa High/1.58 kPa Low
Max - Min Inlet Pressure Range	1.13kPa - 3.45kPa	2.75kPa - 3.45kPa
Injector Size	1 X 2.30 mm	1 X 1.40 mm
Aeration Settings		
Media Setup	Natural Gas	LPG
Driftwood	Ø16 + 6 x Ø4.0	Ø15 + 6 x Ø4.0
Snow Gum Media	Ø15 + 6 x Ø4.0	Ø15 + 6 x Ø4.0

*Subject to model and flue configuration

NOTE - Appliance is supplied with default aeration setting for the Snowgum media. If fitting Driftwood media, aeration setting will need to change as per size and specification.

SPECIFICATIONS OF INSPIRE 1100

Appliance Type	High Efficiency Gas Fireplace	
Star Rating	Up to 4.6 stars	
Maximum Heating Output	Up to 6.9 kW	
Heats Room up to	100m^2 approx.	
Gas Type	Natural Gas	LPG
Gas Input	29 High/ 21 Low	29 High/ 24 Low
Operating Pressure (TPP)	0.88 kPa High/0.40 kPa Low	2.48 kPa High/1.58 kPa Low
Max - Min Inlet Pressure Range	1.13kPa - 3.45kPa	2.75kPa - 3.45kPa
Injector Size	1 X 2.49 mm	1 X 1.50 mm
Aeration Settings		
Media Setup	Natural Gas	LPG
Driftwood	Ø20 + 2 x Ø4.5	Ø20
Snow Gum Media	Ø16 + 4 x Ø4.5	Ø16 + 4 x Ø4.5

*Subject to model and flue configuration

NOTE - Appliance is supplied with default aeration setting for the Snowgum media. If fitting Driftwood media, aeration setting will need to change as per size and specification.

OPERATION INSTRUCTIONS

USER INSTRUCTIONS

- Do not operate if you smell gas. Turn appliance off, extinguish any open flame. Contact your installer or a licensed gas fitter.
- Do not use if any part of this appliance has been submerged in water. Contact your installer or a qualified service technician.
- Solid fuels must not be burnt in the fire. Leaves, sticks, wood, paper food or material must be kept away from the fire.
- Appliance operates with luminous flames; carbon deposits may occur during operation.
- Should the appliance fail to ignite or was recently turned off, allow 2 minutes before attempting to reignite appliance. In the event of abnormal operation please contact your licensed gas installer, gas service personnel or Glen Dimplex Pty Ltd. Abnormal operation may consist of the following, noisy fan, excessive or small flame, unusual flame appearance or colour, excessive sooting or other.

APPLIANCE QUICK OPERATION

On/Off

1. Press power button on the remote.
2. Press temperature button until ON is displayed.
3. Set the desired temperature - it must be above the room temperature for the appliance to operate.
4. Appliance will start once the flame symbol appears on the remote.
5. Appliance will perform a 60 second pre-purge, then sparking will occur.

– Fire should operate within 1½ minute of remote calling for heat.

NOTE – Should the fire not start, a post purge may occur, turn off remote - wait 2 minutes before reattempting to light the fire.

REMOTE CONTROL GUIDE

NOTE

- Not all remote control functions are available.
- In the event of loss of power, the appliance will shut down safely. The appliance may automatically resume operation once power is restored, pending the operation mode of the remote control.

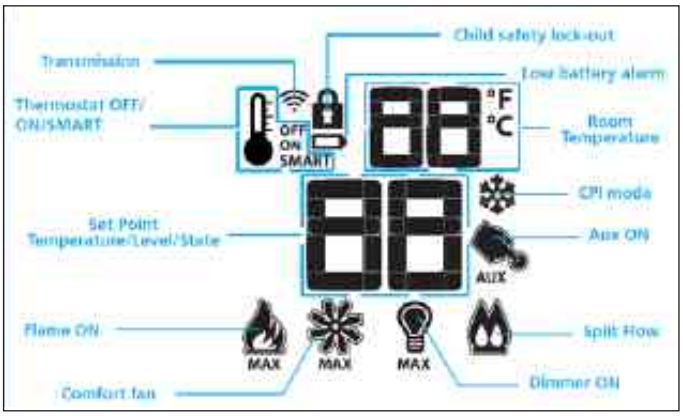

Transmitter LCD display

TECHNICAL DATA - Remote control

Supply Voltage	4.5V (three 1.5 V AAA batteries)
Temperature Settings	0 - 50°
Radio Frequency	315 MHz

WARNING

THE TRANSMITTER AND RECEIVER ARE RADIO FREQUENCY DEVICES. PLACING THE RECEIVER IN OR NEAR METAL MAY SEVERELY REDUCE THE SIGNAL RANGE.

ATTENTION:

- Turn off the main gas supply of the appliance during installation or maintenance of the receiver device.
- Turn off main gas supply to the appliance prior to removing or reinserting the batteries.
- In case of remote control malfunction turn off the IFC device using the on/off switch.
- For installation/maintenance switch off the IFC device removing main power supply plug.

TEMPERATURE INDICATION DISPLAY

Setting the remote control display in Farenheit or Celcius

With the system in the OFF position, press the thermostat key and the mode key at the same time. Look at the LCD screen on the transmitter to verify that a C or F is visible to the right of the room temperature display.

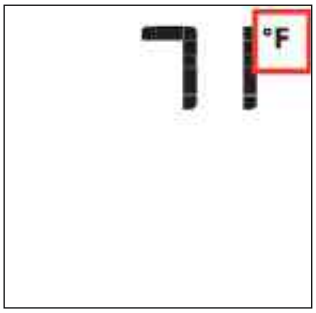

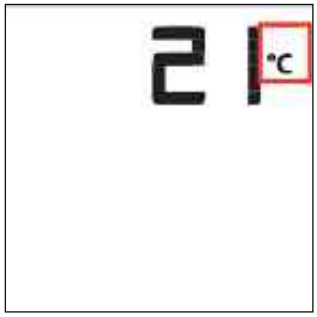

TURN OFF THE APPLIANCE

With the system ON, press the ON/OFF key on the transmitter. The transmitter LCD display will only show the room temperature. At the same time the receiver will turn off the appliance. A single "beep" from the receiver confirms reception of the command.

Remote control display

REMOTE FLAME CONTROL

The proflame has six (6) flame levels. With the system ON, and the flame level at the maximum in the appliance, pressing the down arrow key once will reduce the flame height by one step until the flame is turned off.

The up arrow key will increase the flame height each time it is pressed. If the up arrow key is pressed while the system is on but the flame is off, the flame will come on in the high position. A single "beep" will confirm reception of the command.

Flame Off

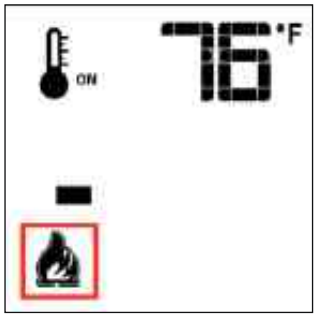

Flame Level 1

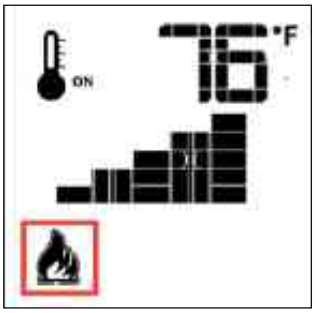

Flame Level 5

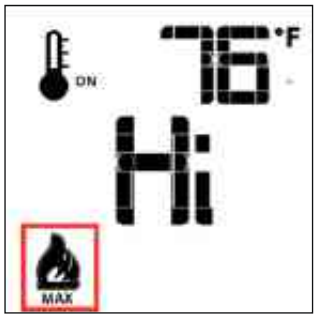

Flame Level Max

ROOM THERMOSTAT (TRANSMITTER OPERATION)

The remote control can operate as a room thermostat. The thermostat can be set to a desired temperature to control the comfort level in a room.

To activate this function, press the thermostat key. The LCD display on the transmitter will change to show that the room thermostat is "ON" and the set temperature is now displayed. To adjust the set temperature, press the up or down arrow keys until the desired set temperature is displayed on the LCD screen of the transmitter.

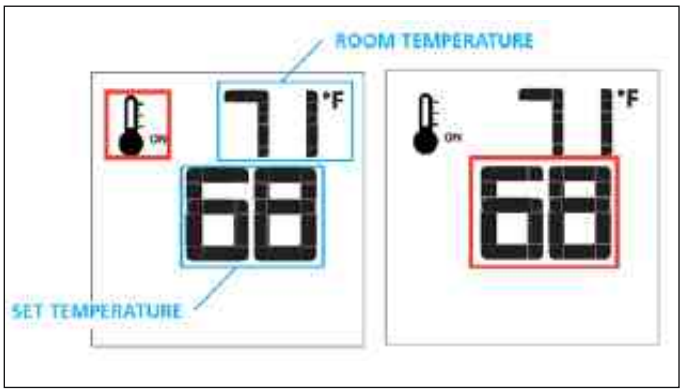

SMART THERMOSTAT (TRANSMITTER OPERATION)

The smart thermostat function adjusts the flame height in accordance with the difference between the set point temperature and the actual room temperatures. As the room temperature gets closer to the set point the smart function will modulate the flame down. To activate this function, press the thermostat key until the word "SMART" appears to the right of the temperature bulb graphic.
To adjust the set temperature, press the up or down arrow keys until the desired set temperature is displayed on the LCD screen of the transmitter.

Note: When the smart thermostat is activated, manual flame height adjustment is disabled.

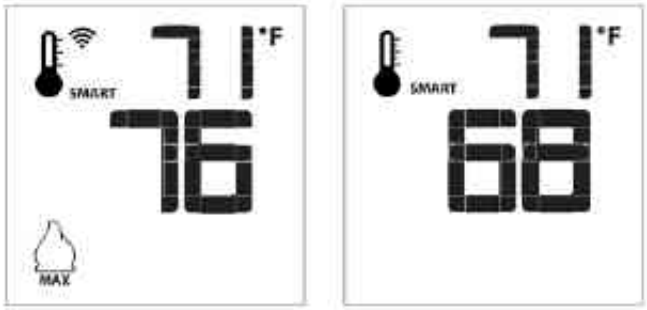

Fan speed control - this function is not supported on this fire.

Remote dimmer control (Light) - this function is not supported on this fire.

Split flow control - this function is not supported on this fire.

CONTINUOUS PILOT/INTERMITTENT PILOT (CPI/IPI) SELECTION

NOTE - Fire operation requires the system to be on IPI mode.

With the system in "OFF" position, press the mode key to index to the CPI mode icon. Pressing the Up arrow key will activate the Continuous Pilot Ignition mode (CPI). Pressing the Down arrow key will return to IPI. A single "beep" will confirm reception of the command.

NOTE: This fire is designed to run in IPI mode (Intermittent Pilot). The fire is factory preset to operate in this mode. Should the fire or remote need factory resetting, the IPI mode must be re-selected. Should the remote be in CPI mode or the pilot remains constantly on, please contact Glen Dimplex or your installer to correct the settings.

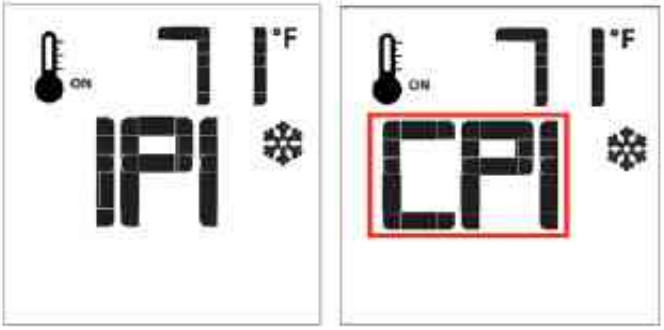

Key Lock

This function will lock the keys to avoid unsupervised operation. To activate this function, press the Mode and Up keys at the same time. To de-activate this function, press the Mode and Up keys at the same time.

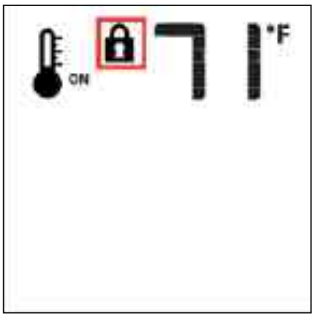

LOW BATTERY POWER DETECTION - TRANSMITTER

The life span of the remote control batteries depends on various factors: quality of the batteries used, the number of ignitions of the appliance, the number of changes to the room thermostat set point, etc.

When the transmitter batteries are low, a battery icon will appear on the LCD display of the transmitter before all battery power is lost. When the batteries are replaced this icon will disappear.

TEACHING RF CODE – Reprogramming remote to heater

(To be done by qualified personnel)

1. Remove front trim as per instructions on page 50.
2. Turn the remote to off mode
3. Turn mains power to heater on.
4. Press the red button on the receiver once – three beeps should be heard.

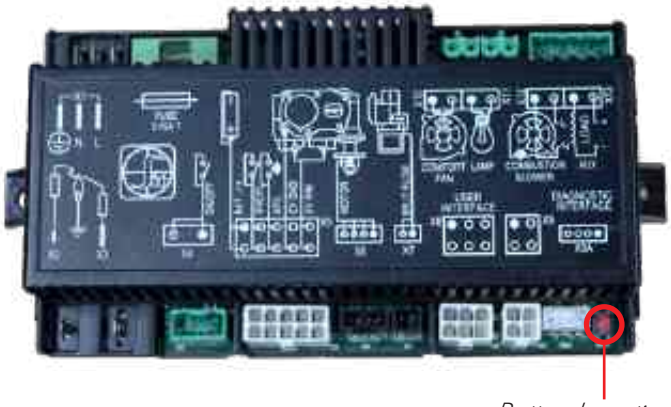

Button Location

5. Press the on button on the remote – four beeps should be heard.
6. Remote is now connected.

NOTE -
FAULT CODES

Gas Valve controller – no fault codes available.

Remote – no faults codes available.

TROUBLESHOOTING FOR YOUR FIREPLACE

Problem	Possible Cause	Suggested Solution
When the remote is activated nothing happens	Remote not talking to receiver	• Listen for a beep sound to suggest that the signal is being received. No beep means no signal being received. • Check power to appliance is switched on. • Check batteries in remote. • Reprogram remote to receiver. • If the beep is heard, allow 70 seconds for the fire to ignite.
Fire cuts off and will not relight	Over temperature safety has tripped	• Allow fire to cool and reattempt ignition • Check room fan is not blocked. • Check fire airflow is not restricted.
Flame appears low or excessively high	Incorrect gas or pressure	• Check test point pressure and supply pressure to appliance. • Check gas type • Replace valve if required • Check injector for blockage and size
Smell in room while operating	Paint curing or firebox door leak	• If new appliance - run for several hours, open all room ventilation and allow paint to cure. • Turn off appliance and then have door seal inspected by service personnel or Real Flame agent.
Room air fan is noisy or not working	Faulty or dirty fan	• Fan to be inspected and cleaned • Replace fan
Appliance operates correctly but pilot remains constantly on.	Remote IPI/CPI incorrectly set	Correct remote control mode to IPI setting.
Pilot lights then goes out when main burner Ignites	Pilot set point incorrect	Contact GDA service

*If your fireplace still does not operate correctly consult your dealer. All service and repairs should be performed by an authorised agency. All spare parts and optional trim finishes are available from Glen Dimplex Pty Ltd.

INSTALLATION INSTRUCTIONS

UNIT DIMENSIONS

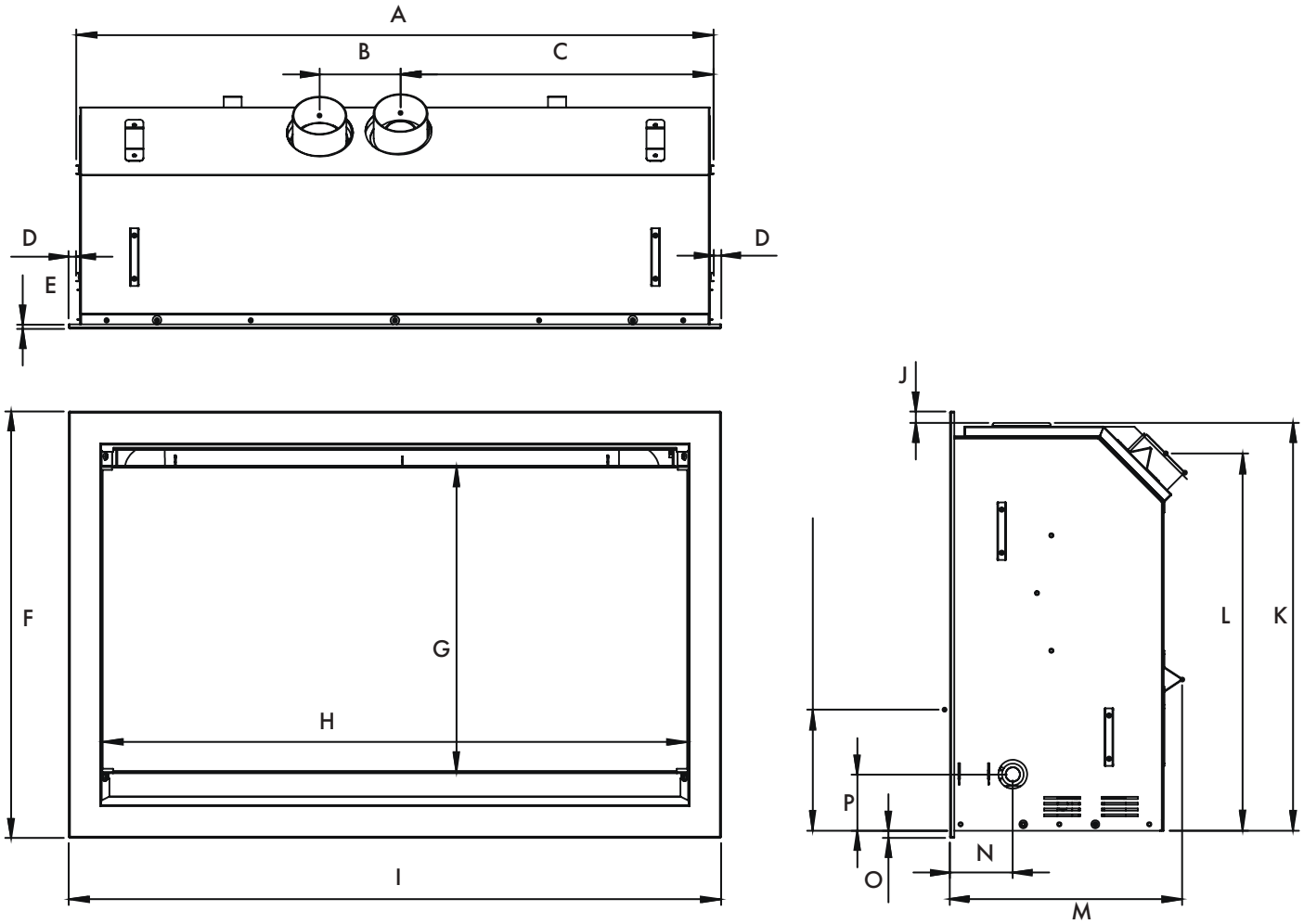

UNIT	A	B	C	D	E	F	G	H
INS700	684	112	334	11	7.5	592	425	610
INS900	884	112	434	11	7.5	592	425	810
INS1100	1084	212	434	11	7.5	592	425	1010

UNIT	I	J	K	L	M	N	O	P
INS700	705	16	566	524	322	87	10	78
INS900	905	16	566	524	322	87	10	78
INS1100	1105	16	566	524	322	87	10	78

MINIMUM FRAMEOUT DIMENSIONS

WITH PINE FRAME

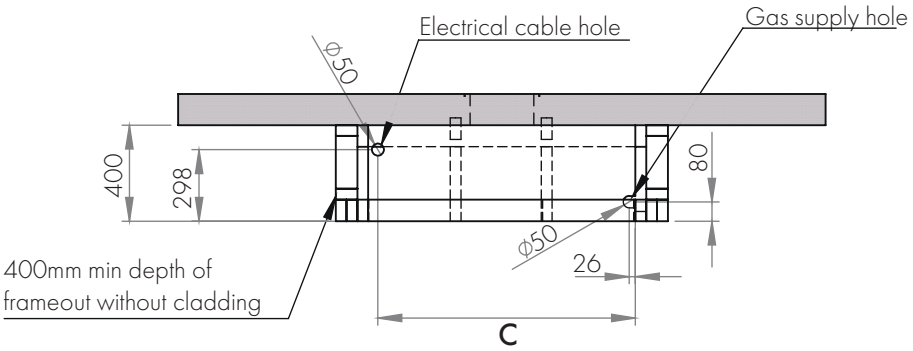

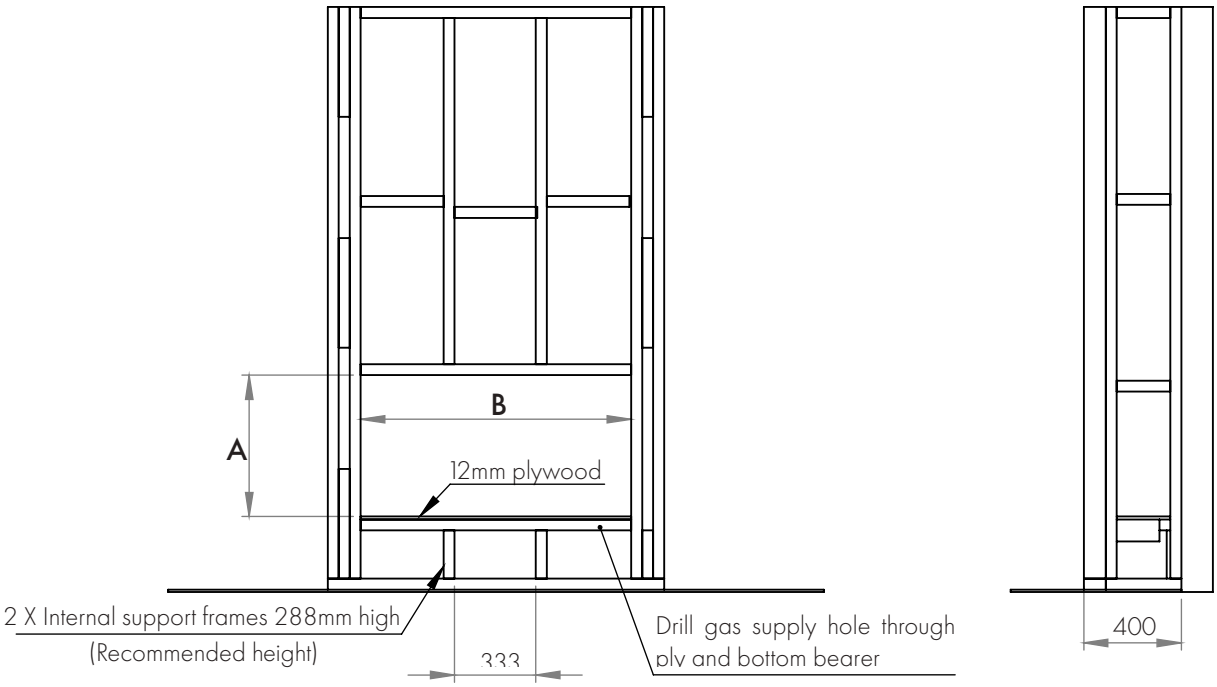

Recommended timber checkout 50mm x 200mm x 45mm Timber depth for gas clearance - RH side only

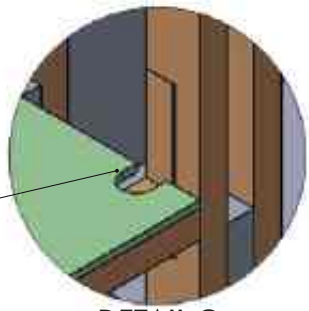

DETAIL G

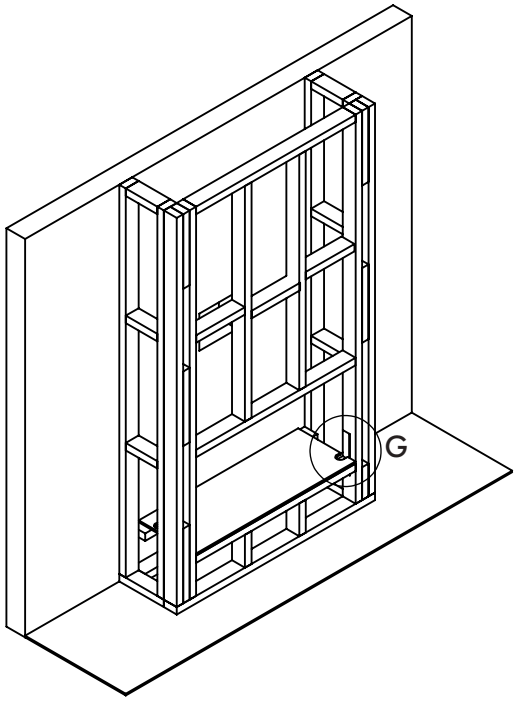

UNIT	A	B	C
INS700	575*	700	670
INS900	575*	900	870
INS1100	575*	1100	1070

NOTE

Use suitable support base, plywood not necessary.

* 675mm When fitting appliance after cladding upper wall

MINIMUM FRAMEOUT DIMENSIONS

WITH APPLIANCE AND PINE FRAME

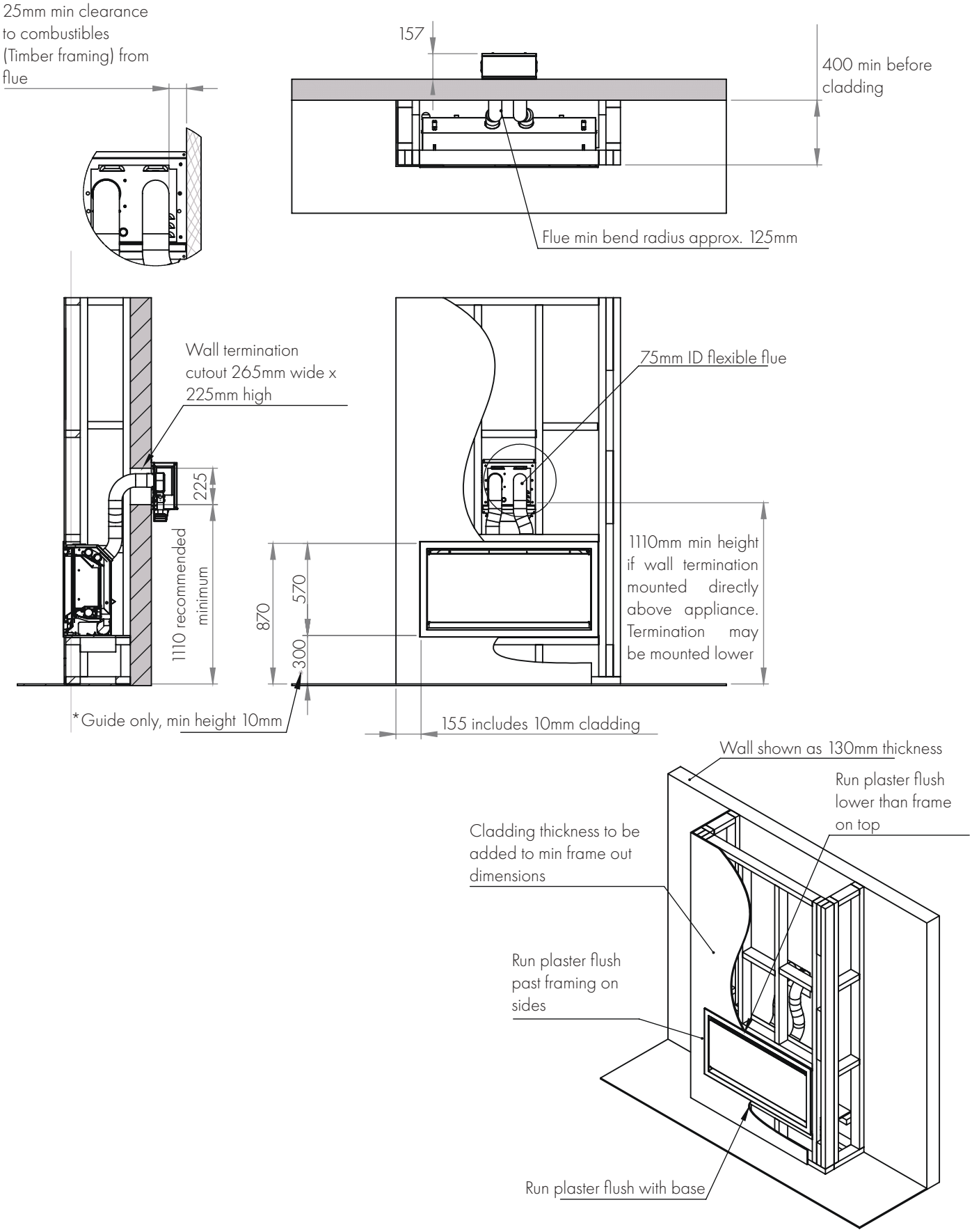

MINIMUM FRAMEOUT DIMENSIONS

HORIZONTAL TERMINATION WALL CUT OUT

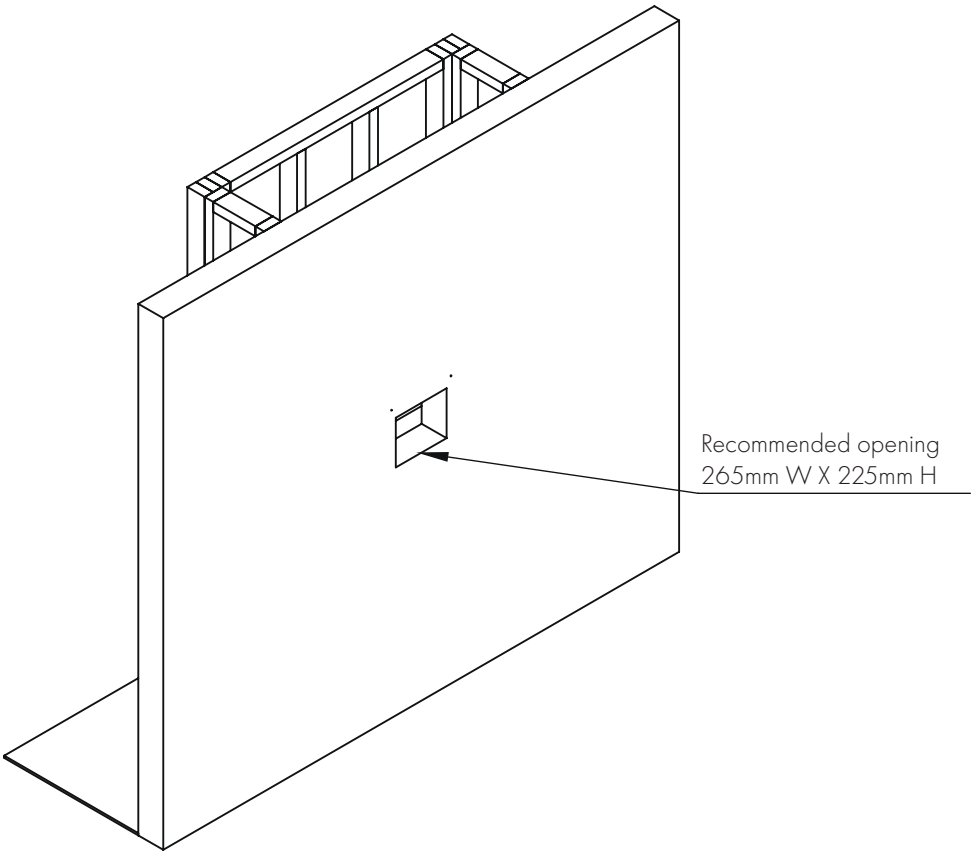

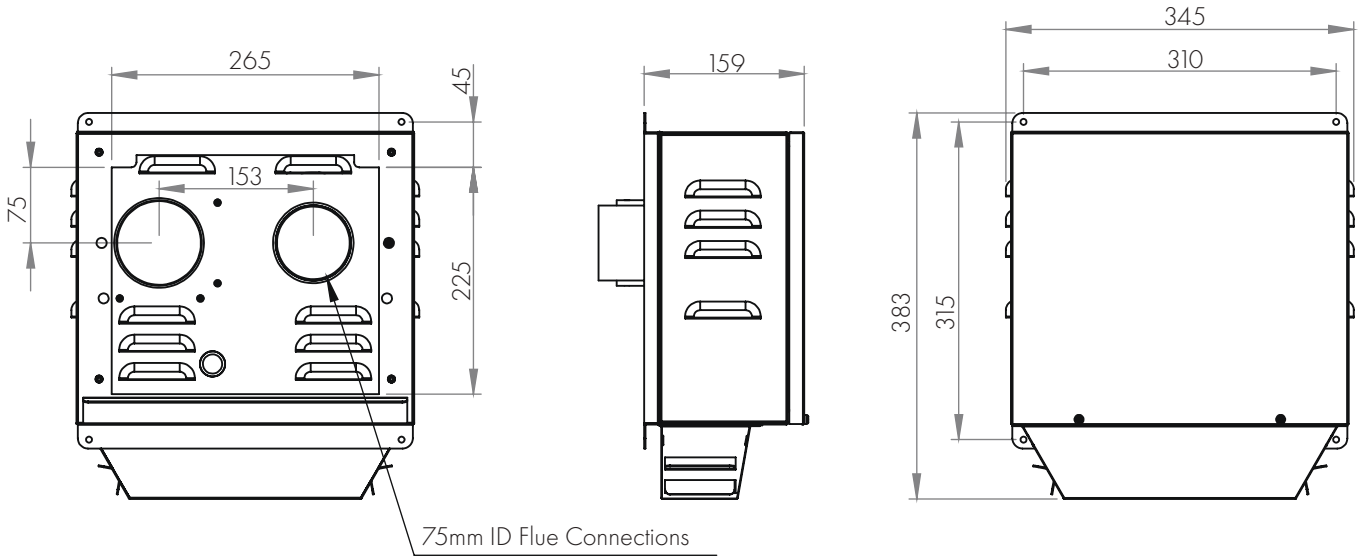

INSTALLING ELECTRONIC EQUIPMENT ABOVE YOUR FIREPLACE

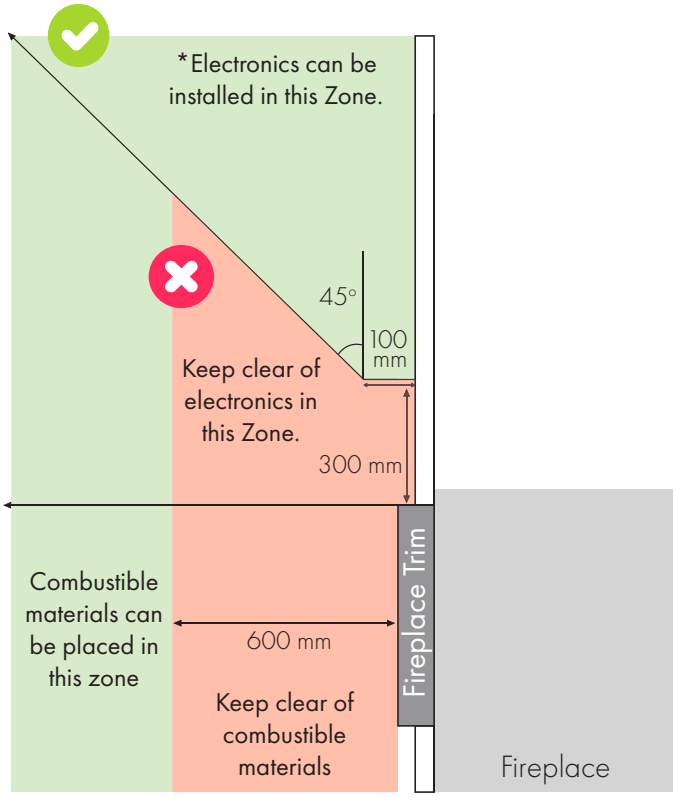

Fig. Side View of the Wall and Fireplace

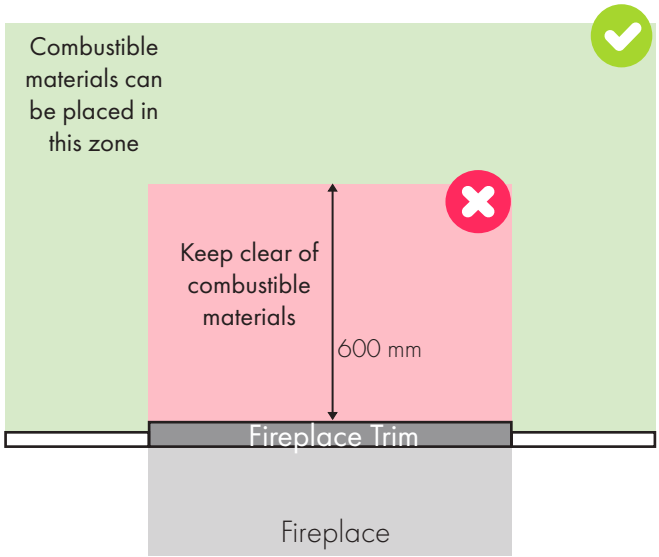

Fig. Top View of the Wall and Fireplace

*A common installation configuration includes the mounting of a TV, soundbar, speakers, or other electrical/electronic equipment above a gas fireplace. If installing any equipment above a Real Flame gas fireplace, a minimum clearance of 300mm from the top edge of the fascia is recommended. Installation of a mantel shelf or an equipment recess is not generally required, but may be added to further protect equipment from the heat which will naturally rise from any gas heating appliance. Due to the wide variety of commercially available equipment which may be installed above a gas fireplace, Glen Dimplex recommends that end users contact their equipment manufacturer to determine suitability in advance of installation. Glen Dimplex offers no guarantees around, nor assumes any responsibility for the suitability of electrical equipment installed in this configuration.

INSTALLING FIREPLACE IN A SOFFIT DESIGN

A	B	C	Soffit material
25	50-200	425	Non-combustible & temperature rated
25*	50-200*	300*	Non-combustible & temperature rated
25	<50	300	Non-combustible & temperature rated
200 - 300	0 - 300	150	Non-combustible & temperature rated
>300	0-300	100	Combustible**

All dimensions in mm unless otherwise stated.

Appliance cannot be recessed > 300mm

*Related to option 2 type of installation in the next page.

**Material must be fit for purpose and its properties must be taken into consideration.

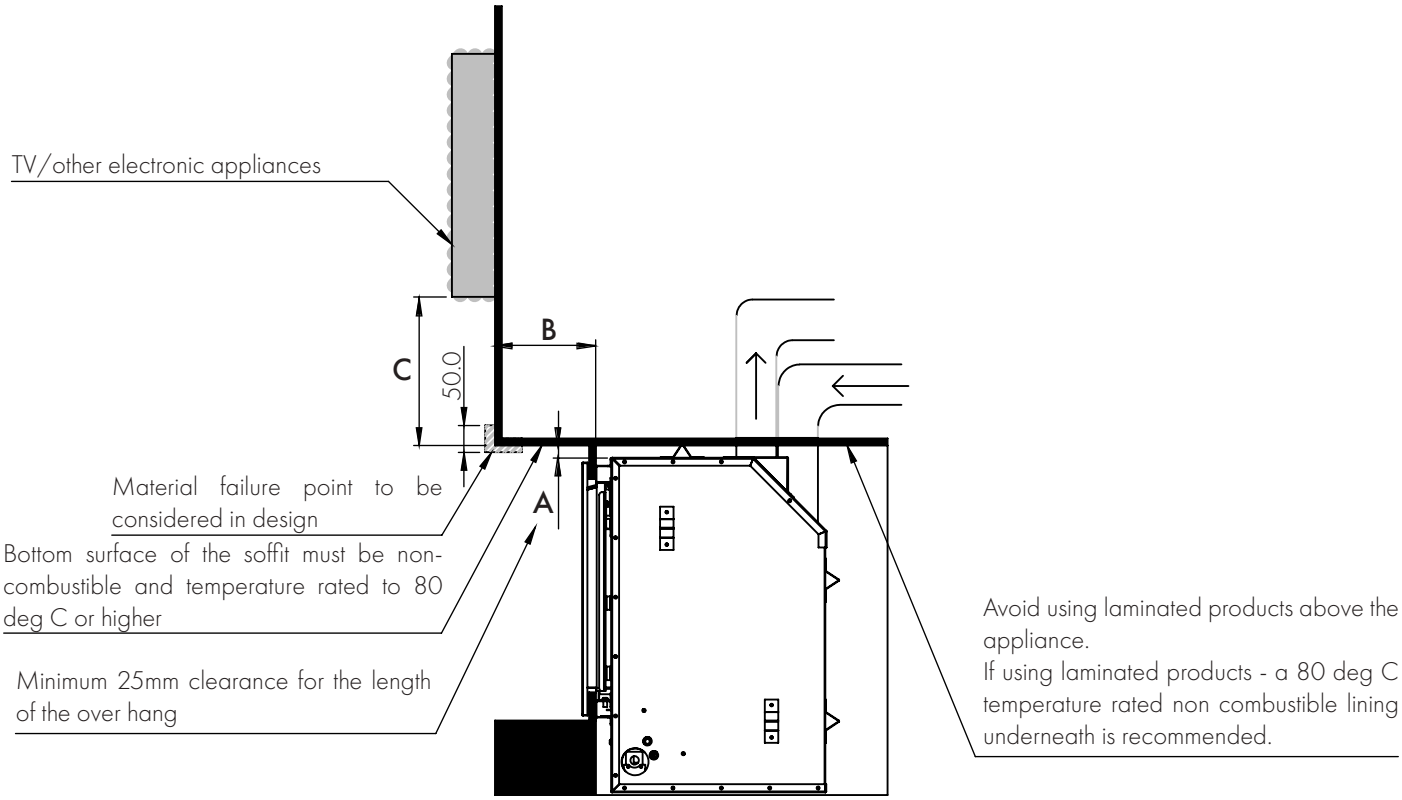

INSTALLING FIREPLACE IN A SOFFIT DESIGN

OPTION 2 - AN ALTERNATE INSTALLATION METHOD

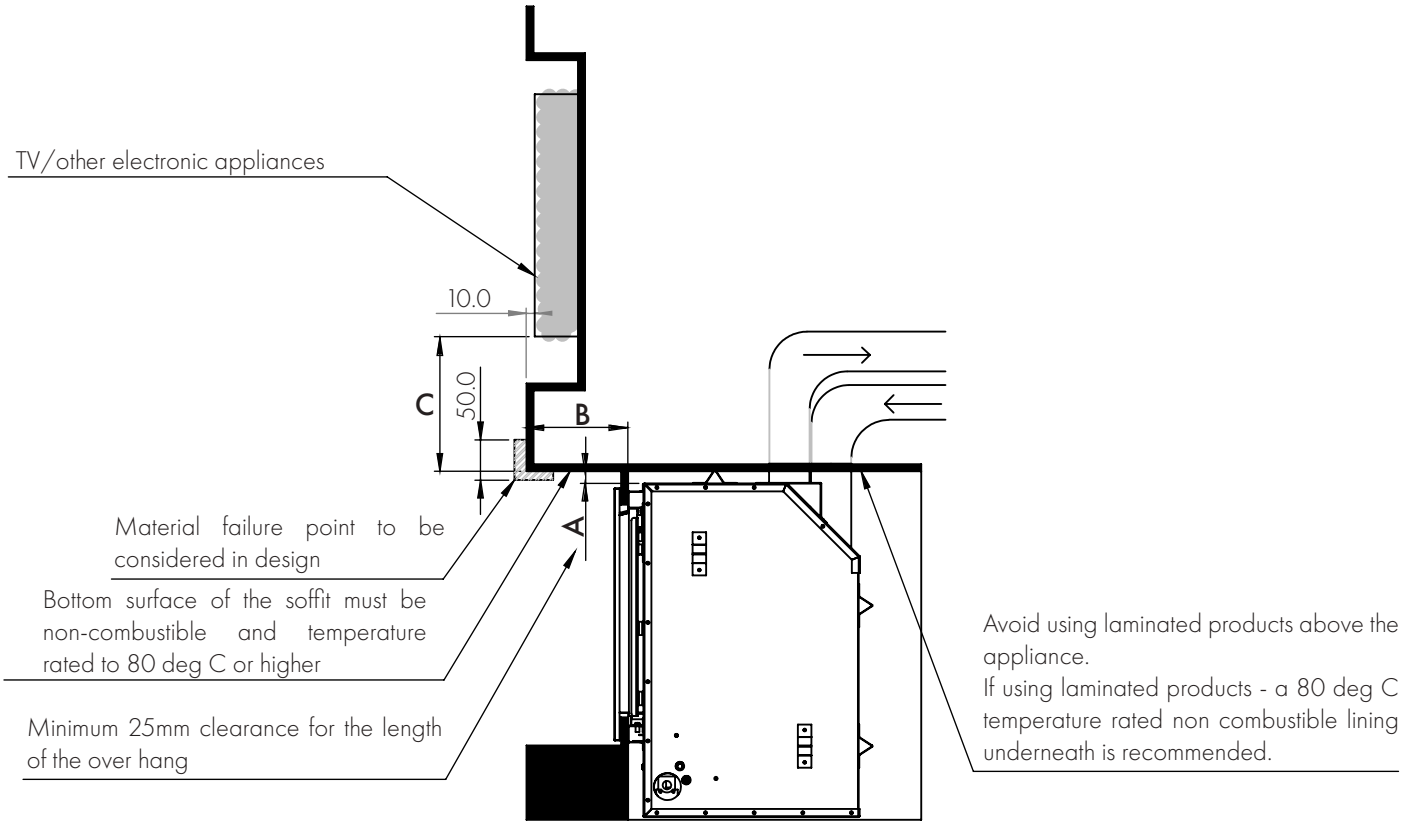

INSPIRE FREESTANDING INSTRUCTIONS

FREESTANDING DIMENSIONS

FIREBOX

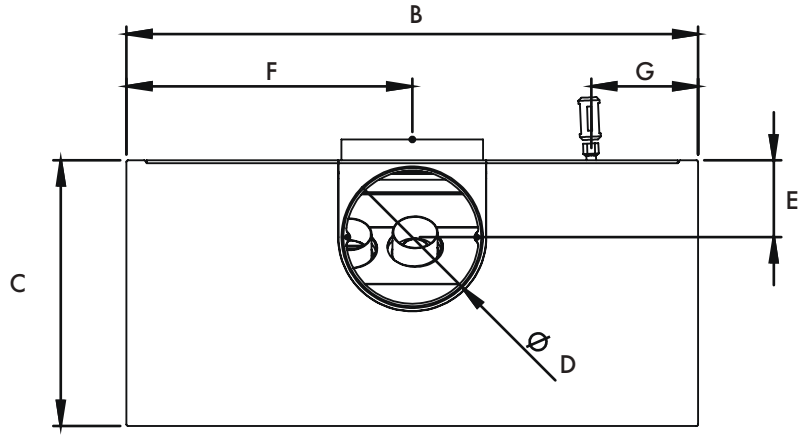

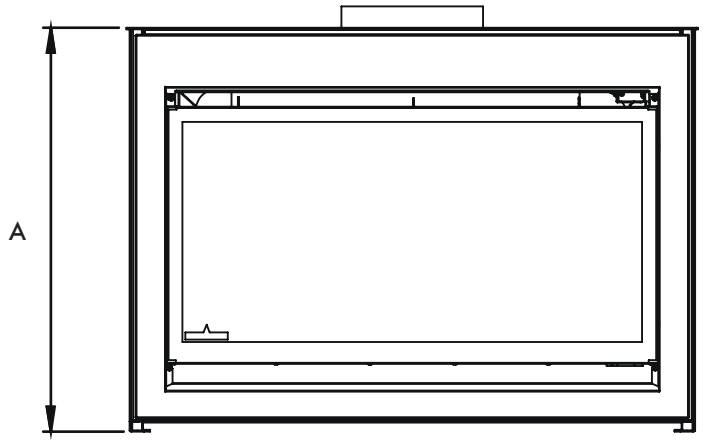

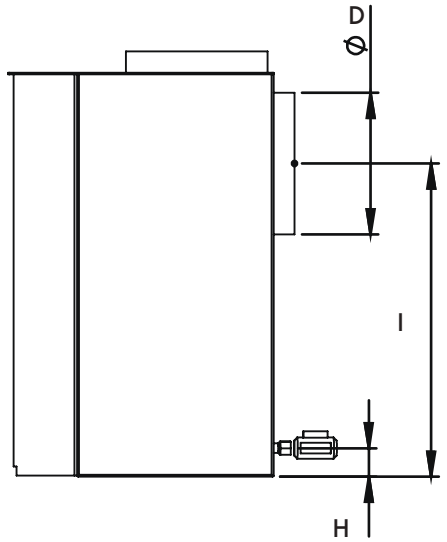

UNIT	A	B	C	D	E	F	G	H	I
INS700FS	668	745	439	228	127	373	85	53	518
INS900FS	668	945	439	228	127	473	85	53	518

FREESTANDING DIMENSIONS

WOODSTACKER

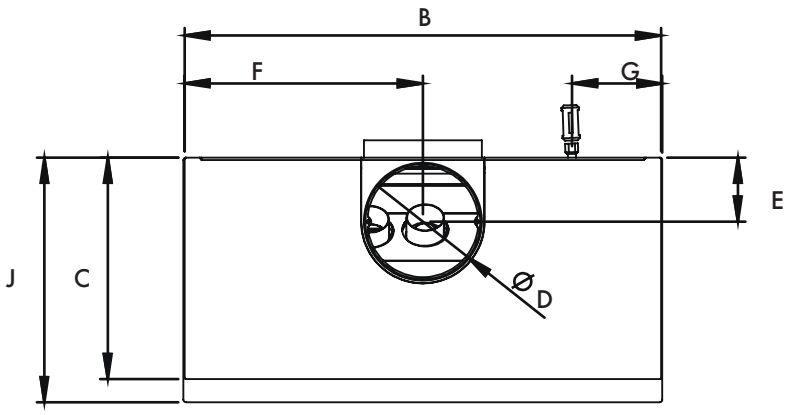

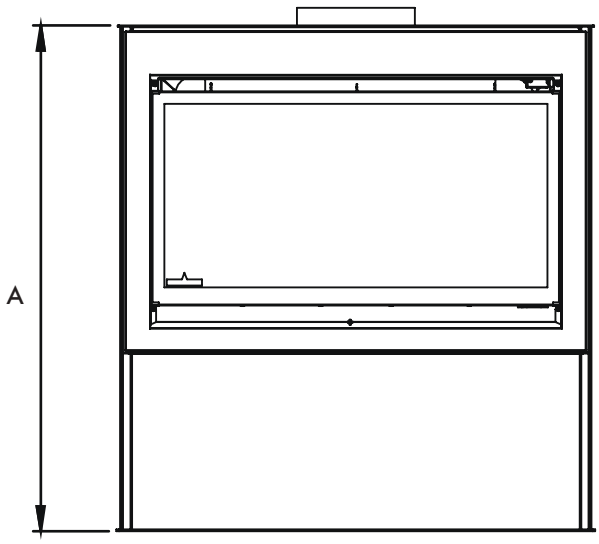

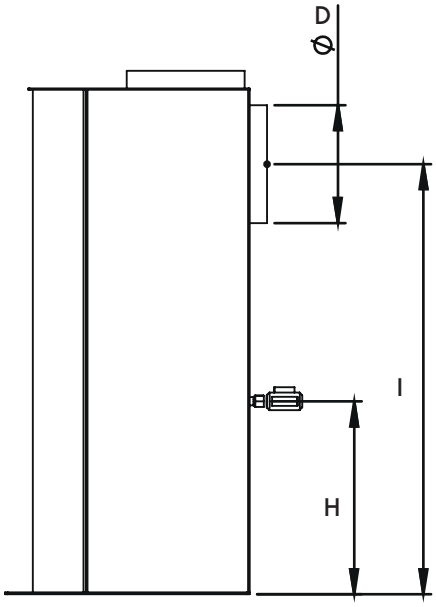

UNIT	A	B	C	D	E	F	G	H	I	J
INS700FS	1005	750	439	228	127	375	85	390	854	485
INS900FS	1005	950	439	228	127	475	85	390	854	485

CLEARANCE INSTRUCTIONS

VERTICAL FLUE - WALL CLEARANCE

FIREBOX INSTALL

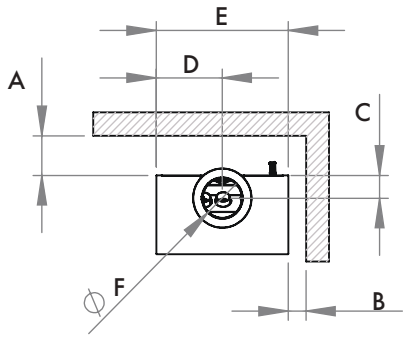

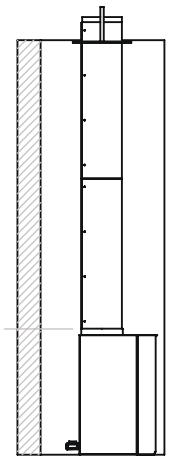

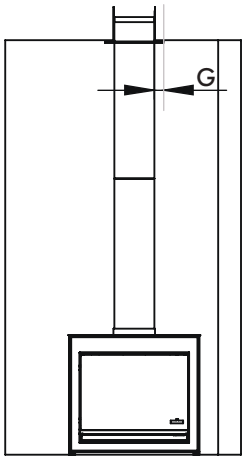

UNIT	A	B	C	D	E
INS700FS	0	0	127	372.5	745
INS900FS	0	0	127	472.5	945

UNIT	F	G
INS700FS	230	25
INS900FS	230	25

WOODSTACKER INSTALL

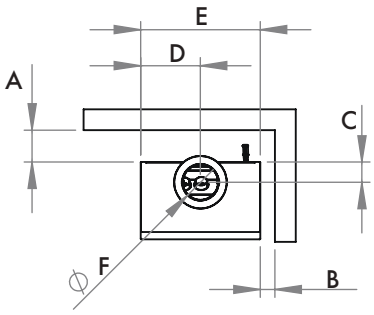

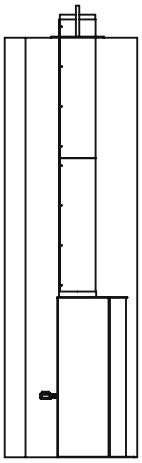

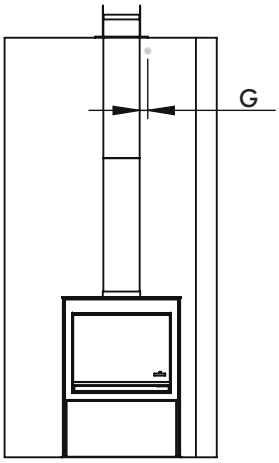

UNIT	A	B	C	D	E
INS700FS	0	0	127	372.5	745
INS900FS	0	0	127	472.5	945

UNIT	F	G
INS700FS	230	25
INS900FS	230	25

CLEARANCE INSTRUCTIONS

VERTICAL FLUE - CORNER CLEARANCE

FIREBOX INSTALL

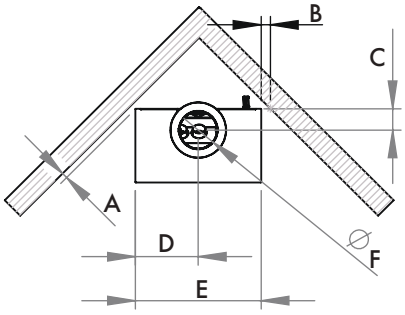

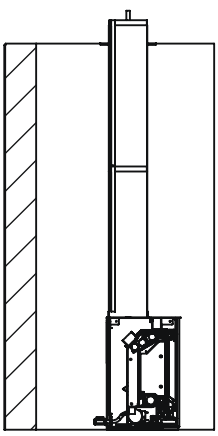

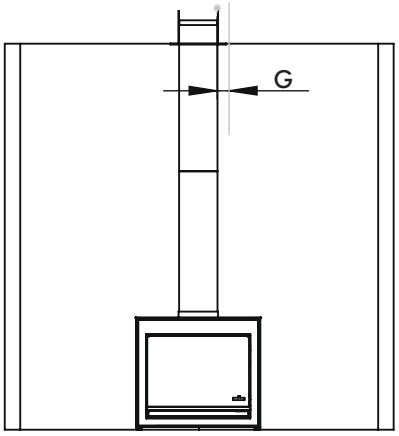

UNIT	A	B	C	D	E
INS700FS	0	0	127	372.5	745
INS900FS	0	0	127	472.5	945

UNIT	F	G
INS700FS	230	25
INS900FS	230	25

WOODSTACKER INSTALL

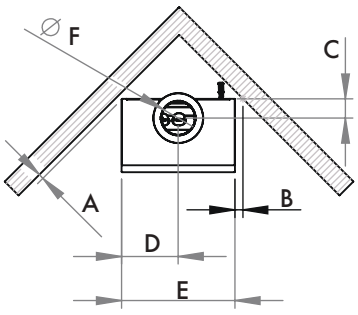

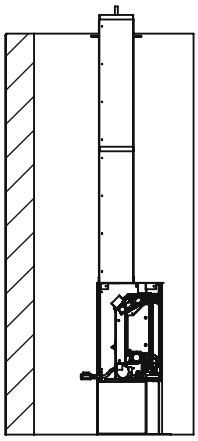

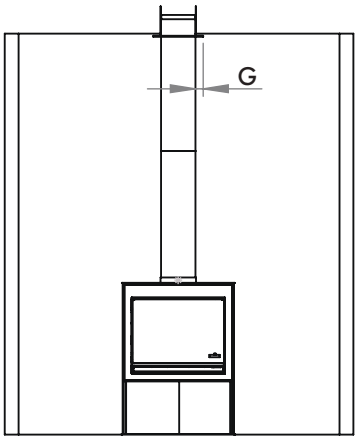

UNIT	A	B	C	D	E
INS700FS	0	0	127	372.5	745
INS900FS	0	0	127	472.5	945

UNIT	F	G
INS700FS	230	25
INS900FS	230	25

CLEARANCE INSTRUCTIONS

HORIZONTAL FLUE - WALL CLEARANCE

FIREBOX INSTALL

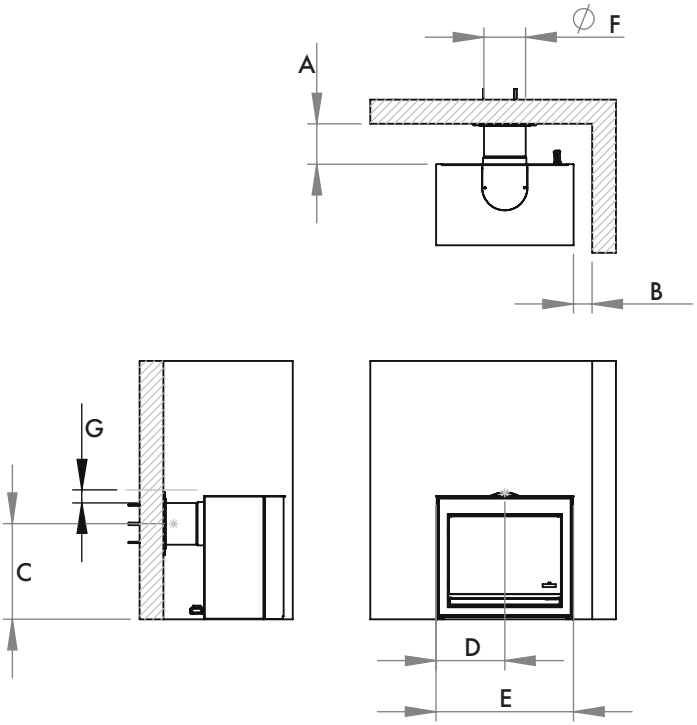

UNIT	A	B	C	D	E
INS700FS	0	0	518	372.5	745
INS900FS	0	0	518	472.5	945

UNIT	F	G
INS700FS	230	25
INS900FS	230	25

WOODSTACKER INSTALL

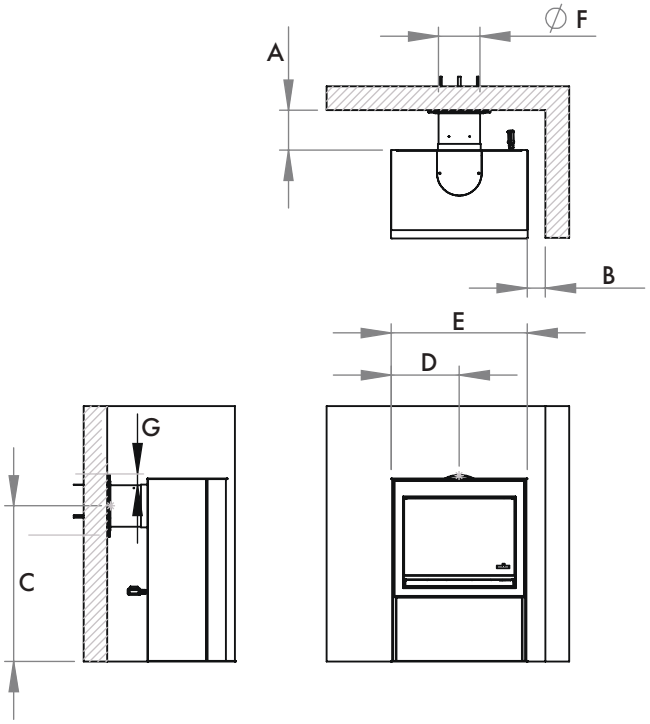

UNIT	A	B	C	D	E
INS700FS	0	0	854	372.5	745
INS900FS	0	0	854	472.5	945

UNIT	F	G
INS700FS	230	25
INS900FS	230	25

CLEARANCE INSTRUCTIONS

HORIZONTAL FLUE - CORNER CLEARANCE

FIREBOX INSTALL

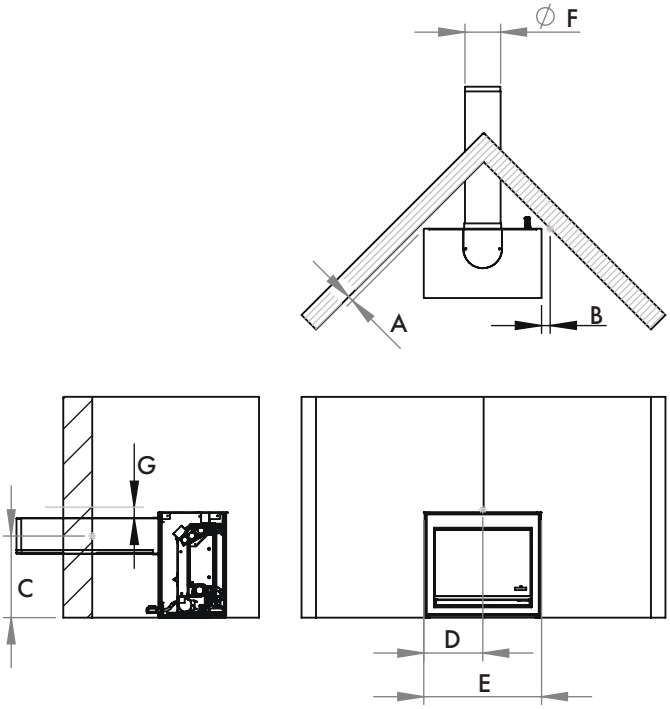

UNIT	A	B	C	D	E
INS700FS	0	0	518	372.5	745
INS900FS	0	0	518	472.5	945

UNIT	F	G
INS700FS	230	25
INS900FS	230	25

WOODSTACKER INSTALL

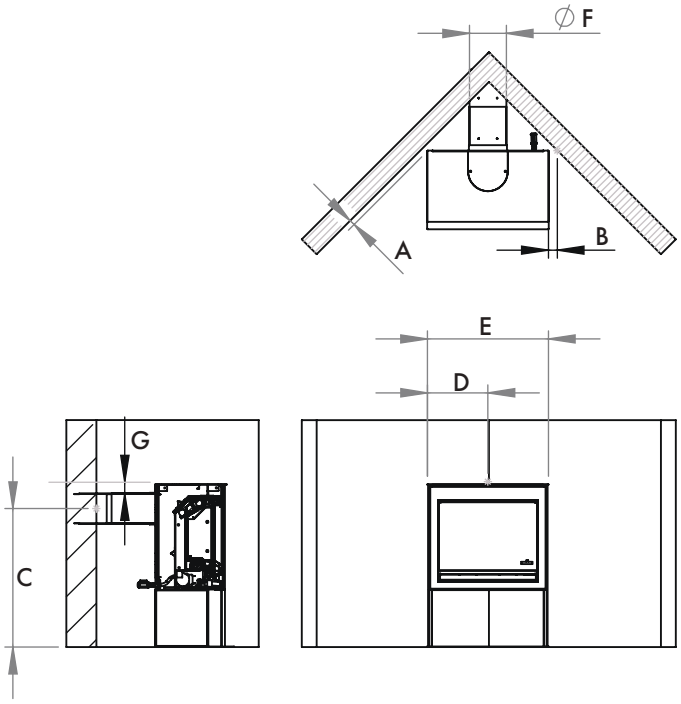

UNIT	A	B	C	D	E
INS700FS	0	0	854	372.5	745
INS900FS	0	0	854	472.5	945

UNIT	F	G
INS700FS	230	25
INS900FS	230	25

SETUP INSTRUCTIONS

FREESTANDING FLUE AND GAS VALVE SETUP

Unpack appliance and inspect for damage. Please report any damage to Glen Dimplex Australia.

Remove trim carefully. Remove earth lead from trim. Remove trim by removing screws on all sides of the trim.

For rear flue exit remove top and rear flue plates and swap. Refit screws to hold plates into place.

Remove top panel (4 screws) for access to install flues.

Precut flue penetration through wall or ceiling. For some installations the flue shield will need to be cut to length and pre-fitted to the cutout, flues may also need to be pre-run through the flue shield.

Fit isolation valve to appliance.

Locate appliance into position. Fit the long bracket to the wall and attach holding chain to both the appliance and wall bracket. Secure the chain with a nut and a bolt.

Connect gas to appliance, tighten connections. Test connections for leaks.

Cut flue shields to length. Flue shield to penetrate through ceiling ring when installed. It is recommended the flue shield penetrates through the ceiling /wall a minimum of 50mm. Where required flue shield can be riveted to collar on appliance.

Install ceiling ring onto flue shield, fit flue shield to appliance and wall / ceiling penetration.

Ceiling ring tabs to be bent / screwed on to frame to hold ring in place. Avoid excessive penetration through ceiling ring to avoid scratching flue.

Install flues from outside of appliances (mark flues to identify the hot / cold flue runs).

NOTE-
Ceiling installation – Fit hot flue first then cold flue.
Wall installation – Fit cold flue first then hot side.

Air intake(cold) flue. Fit clamp to flue. Bend flue and connect to inlet side of appliance. Tighten clamp. – Note ensure flue is round and burr free, bend is tight and requires a burr free connection to fit onto flue.

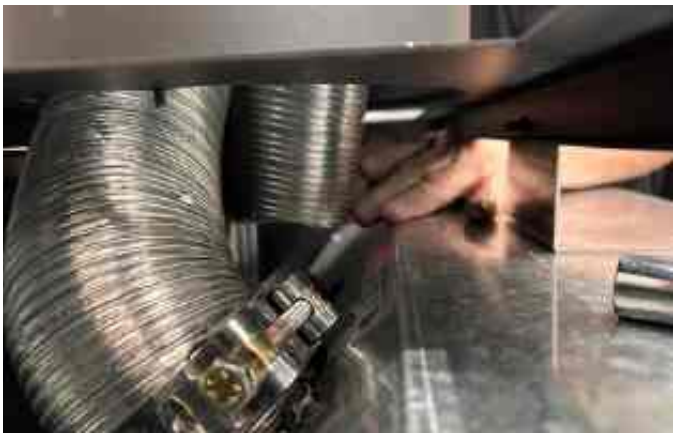

Exhaust (hot) flue. Fit clamp to flue. Bend flue and connect to outlet side of appliance. Tighten clamp.

From external of flue shield, using yellow tongue or similar feed strap through the flue shield cable duct to appliance. Tape power-flue lead to strap and gently pull the cable through the flue shield. Fully pull cable through the flue. Excess cable will need to be stored in the roof space or wall cavity away from hot flue.

Fit flue termination as per instructions.

Fit and screw in the flue bracket supplied with the unit to the timber frame.

Connect appliance to mains power supply.
Fit top cover to enclosure – refit 4 screws.

Fit media to appliance.

Test and commission appliance as gas installation codes AS5601.

Refit earth lead to trim and refit trim.

Instruct customer on how to operate appliance safely.

INBUILT INSTALLATION INSTRUCTIONS

LOCATION

Select a location where the fire can be supervised during operation. An electrical isolation switch must be fitted at the appliance or on an adjacent wall to allow for emergency shutdown and maintenance. Installation must meet Australian gas codes AS/NZS5601.

INSTALLATION CLEARANCES

Clearances from combustible materials

Floor	0mm
Sides	5mm
Top	5mm
Flue outer	25mm
Front	250mm
Back	25mm

Note: *Once installed no combustible items should be placed within 600mm of the fire viewing window.*

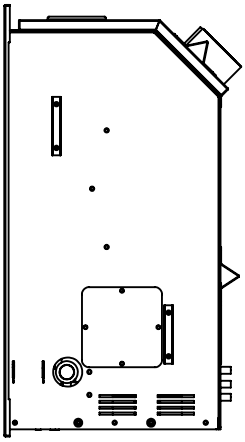

GAS CONNECTION	15mm (1/2") Compression union
ELECTRICAL CONNECTION	3 Pin 10 Amp GPO plug
POWER RATING OF APPLIANCE	230V 50Hz 0.55 Amp

INSTALLATION CODES

Note appliance gas type – Natural gas/LPG. Should the appliance be the incorrect gas type, please contact the supplier for conversion details.

Installers – Please ensure the installation and instruction manuals supplied with this appliance are supplied to the customer and the customer is trained on how to operate the appliance correctly.

Do not modify the appliance.

Do not exceed maximum rated pressures.

Appliance must be installed with gas installation code (AS/NZS5601) and applicable electrical installation code (AS3000).

Test for gas leaks prior to operating appliance.

Check gas pressures and adjust if incorrect.

FLUE CONFIGURATIONS

0-5m- Aluminum flexi flue.
5-8.5m- Aluminum flexi flue insulated.

Inlet flue - 5 x 90 bends.
Outlet flue - 5 x 90 bends.

Appliance is supplied with a 2 x 5m or 2 x 8.5m flexible flue lengths. Flue can be cut to length as required.

FLUE SPECIFICATIONS

75mm internal diameter twin walled aluminum flexible flue, supplied in 5m lengths. Flue external diameter approx. 83mm.

Flue must be clipped and supported support. Connections must be sealed with silicon and clamped where advised.

Note- *U style flue runs must not be installed:*

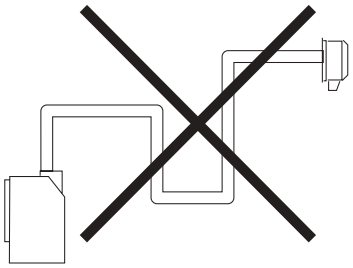

Recommended Silicon – Non-acetic, neutral cure 200°C or higher temperature rated. Bostik RTV 926 or similar.

0-5M FLUE CONFIGURATION

0M-5M
EXTERNAL WALL MOUNTED FAN MODULE INSTALLATION

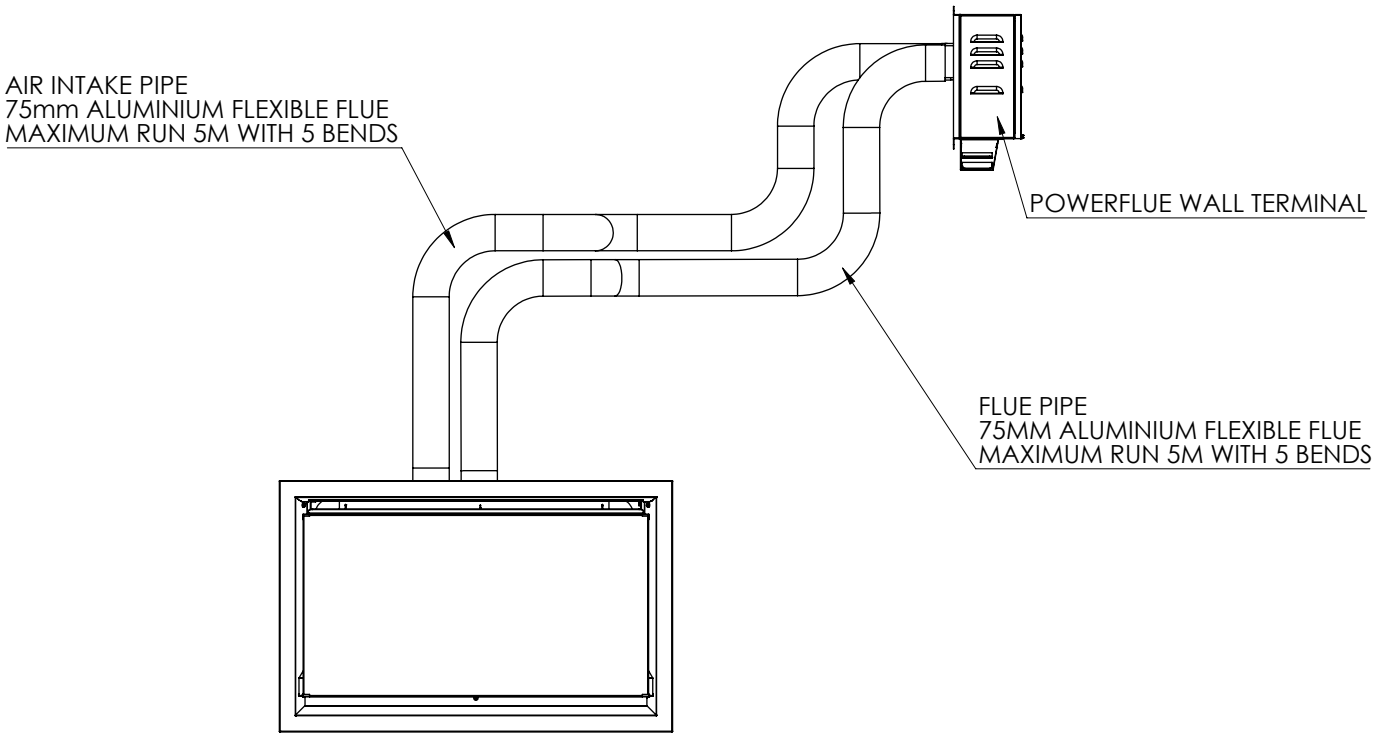

Setup with external fan module with wall termination

Maximum flue length of 5m

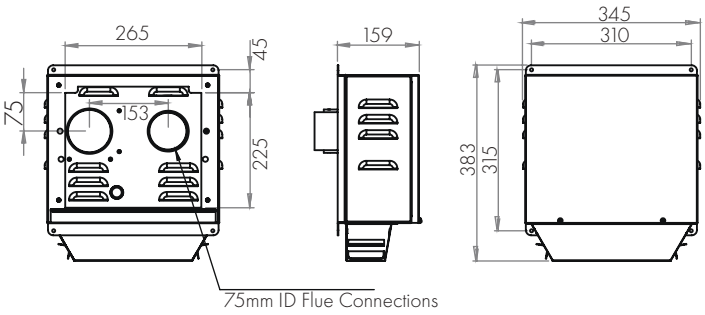

1. Wall mounted fan module – terminal must be installed with clearances as specified by AS/NZS5601**.1 Clause 6.9.3.**

2. Run exhaust flue and air intake flue as required Maximum run 5m. Maintain clearances to combustibles.

3. Connection to appliance

Cut tube to length where required.

Ensure ends are burr free and round, test fit flue will slide over connection.

Recommended Silicon – Non-acetic, neutral cure 200°C or higher temperature rated.

Bostik RTV 926 or similar.

Apply an 8mm thick silicon bead fully around heater connection approx. 10mm from the top.

Apply an 8mm silicon bead fully around the inside of the flue end (heater connection end)

Fit flue clamp over flue (loosely).

Slide flue onto connection spigot fully.

Tighten clamp fully.

Wipe excess silicon, visually check connection to ensure connection is fully sealed

4. Repeat above with air intake flue pipe to heater connection.

5. Clip flues as required to provide adequate support.
6. Connection to wall mounted fan terminal.

Remove cover from fan terminal

Cut flue exhaust tube (hot tube) to length (Approximately flush with wall exit). Connection plate will sit against wall.

Cut Air intake flue.

Ensure ends are burr free and round, test fit flue will slide over connection.

Pull flue through approx. 100mm (will be pushed back once terminal is fitted).

Feed power cable through wall and into wall terminal.

Apply an 8mm silicon bead fully around the inside of the flue end (heater connection end)

Fit flue clamp over flue (loosely).

Slide flue onto connection spigot fully. Tighten clamp fully. Wipe excess silicon, visually check connection to ensure connection is fully sealed.

Feed air intake flue pipe through location spigot and fit retaining screw.

Mount flue terminal to wall.

Connect power cable connector.

Fit cable clamp to cable.

Fit front cover.

0-5M
ROOFTOP TERMINATION WITH EXTERNAL MOTOR

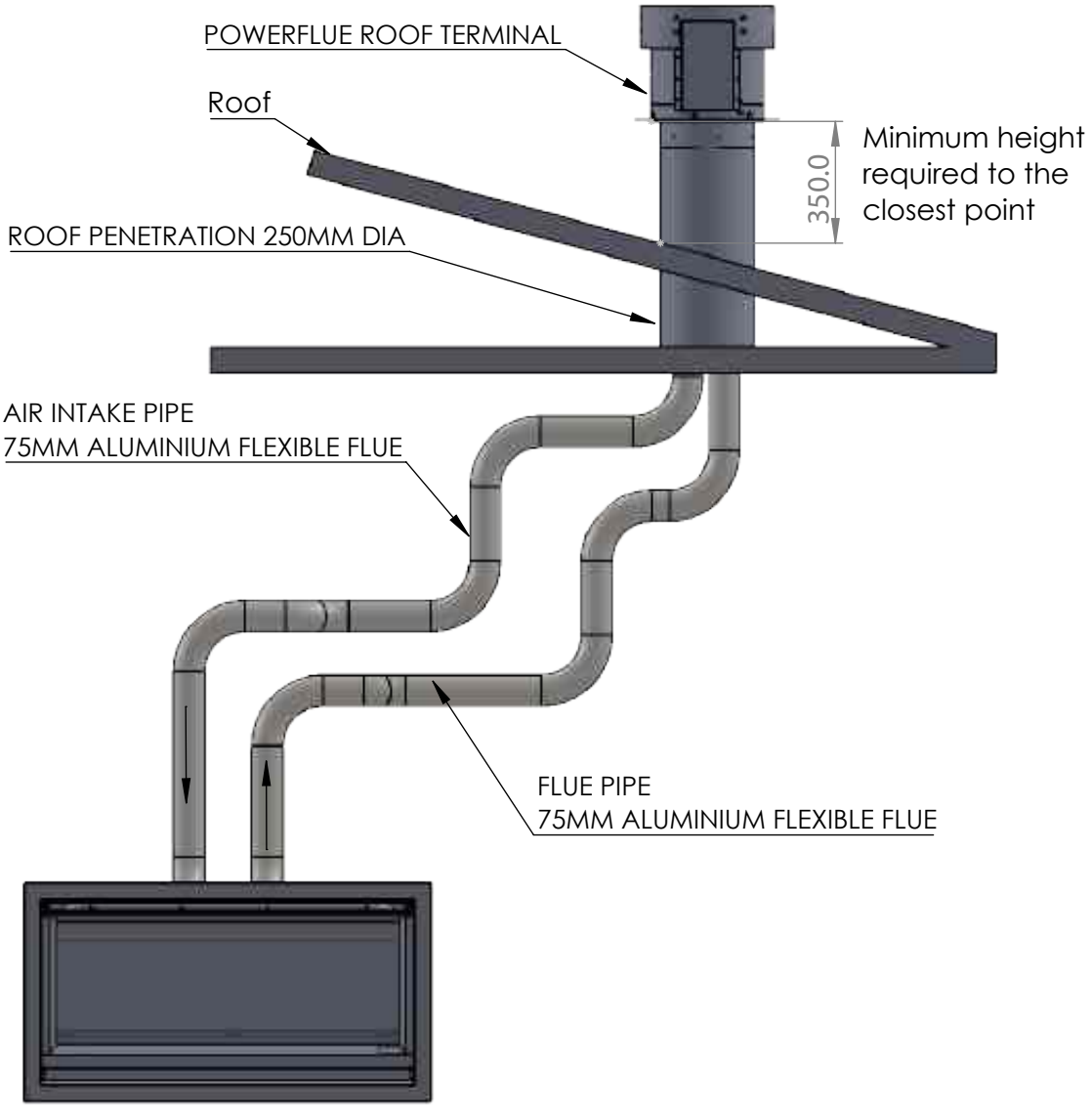

Setup with external rooftop termination

Maximum 5m flue length

Rooftop termination

1. Rooftop fan module – Terminal must be installed with clearances as specified by AS/NZS 5601.1 Clause 6.9.3

2. Run exhaust flue and air intake flue as required

3. **Maximum run 5m.** Flues can be run next to each other. Maintain the required clearances to combustibles.

On the heater connection end - Fit clamp loosely & apply silicon inside the pipes. Apply an 8mm silicon bead fully around the inside of the flue and on the heater spigot. Smear the silicon around the spigot and pipe.

Recommended Silicon – Non-acetic, neutral cure 200°C or higher temperature rated. Bostik RTV 926 or similar.

Slide flue onto connection spigot fully. Tighten clamp fully. Wipe excess silicon, visually check connection to ensure connection is fully sealed.

Repeat above with air intake flue pipe to heater connection.

Clip flues as required to provide adequate support.

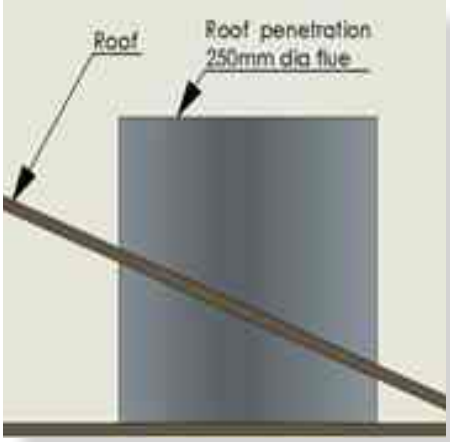

Insert the roof penetration and fix firmly to the roof structure using appropriate supports.

The roof penetration flue is a 250mm rigid flue.

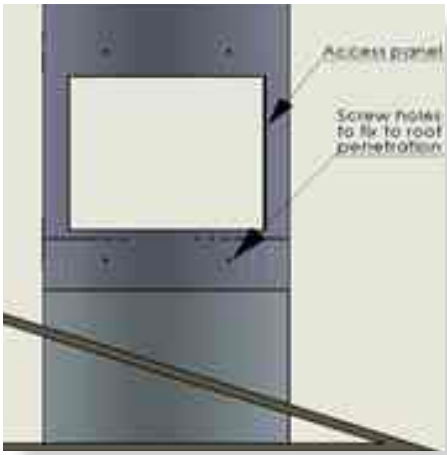

Fit the access panel to the roof penetration.

Use the screw holes fix the access panel to the roof penetration.

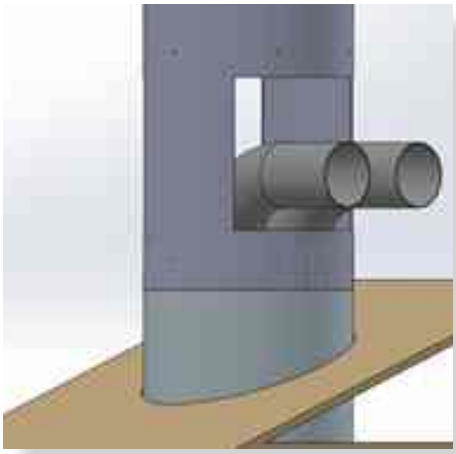

Run flue pipes through the access cut outs before fitting the termination on for ease of installation.
(The picture is a reference only. Take care not to flex/ bend the pipe too sharply and risk slitting the pipe)

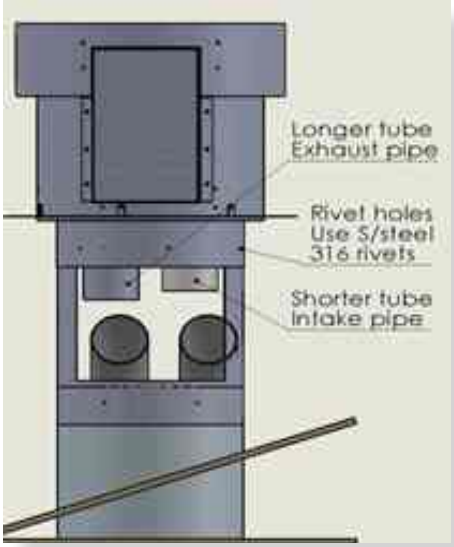

Fit the termination on to the access panel and match the rivet holes to rivet the termination to the access panel.

Use only the rivets provided.

On the termination end - Fit clamp loosely & apply silicon inside the pipes. Apply an 8mm silicon bead fully around the inside of the flue and on the flue spigot. Smear smoothly around the surfaces.

Recommended Silicon – Non-acetic, neutral cure 200°C or higher temperature rated. Bostik RTV 926 or similar.

Slide flue onto connection spigot fully. Tighten clamp fully. Wipe excess silicon, visually check connection to ensure connection is fully sealed.

Ensure that the pipes are connected correctly and are not inverted.

Use the labels to identify exhaust and intake spigots

Connect the fan power cable from the appliance to the termination.

Ensure the cable is clamped only to the intake pipe to secure the cable from hanging loose & touching the hot flue gases pipe.

Use the clamp provided. The clamp can be opened like a collar and fitted around on the flue.

Flex collar and fit around the access panel. Socket the collar all the way up close to the air intake slots Ensure there is a rubber seal top and bottom of the collar.

Use only the screws provided to tightly fit the collar to seal the access panel.

5-8.5M INSULATED FLUE CONFIGURATION

5M-8.5M
EXTERNAL WALL MOUNTED FAN MODULE INSTALLATION

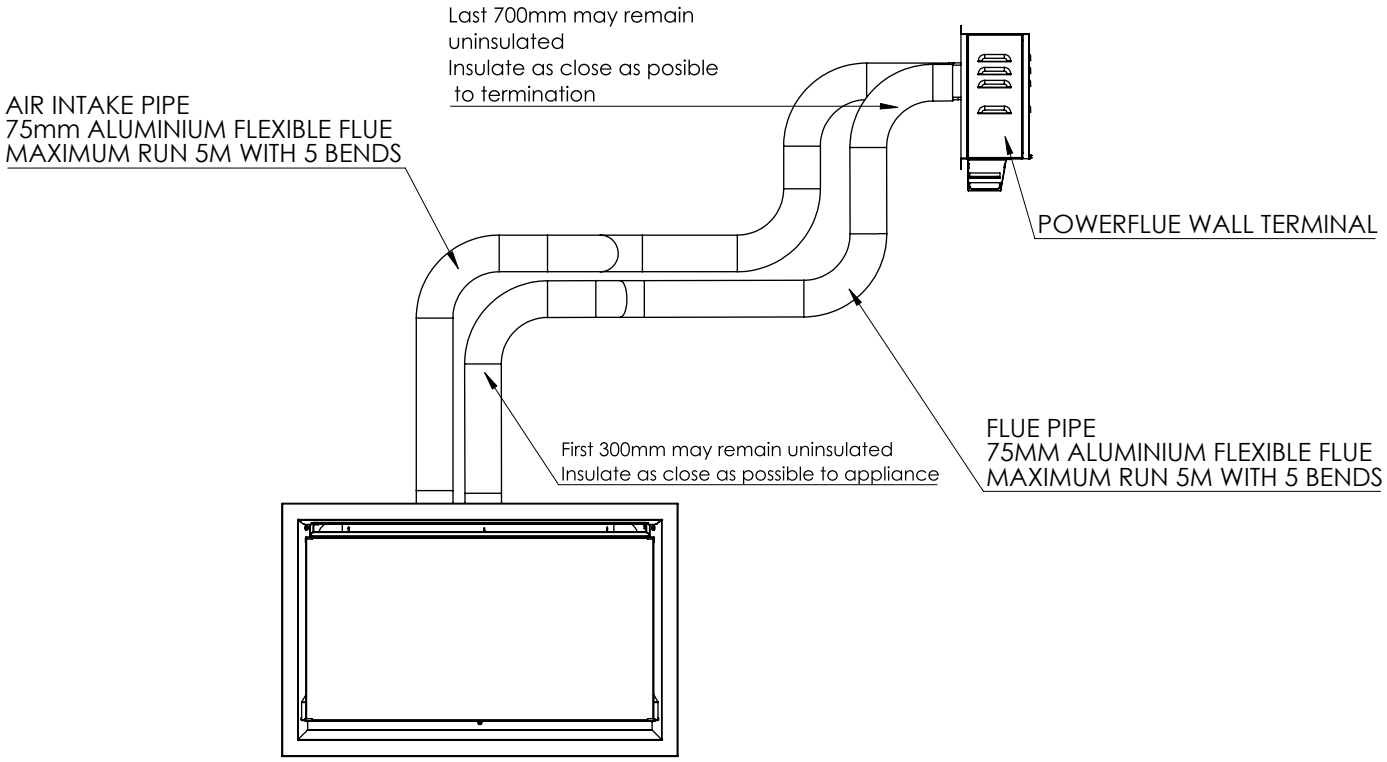

Setup with external fan module with wall termination

Maximum 8.5m flue length

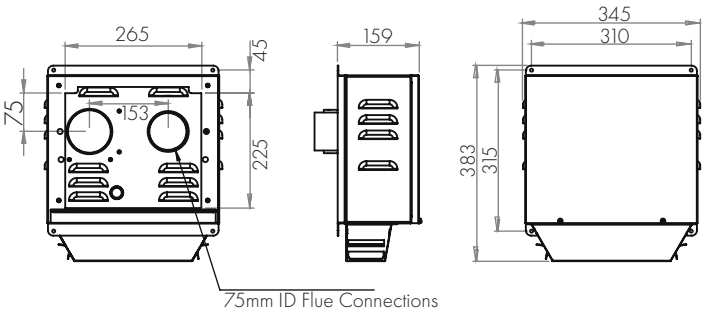

1. Wall mounted fan module – terminal must be installed with clearances as specified by AS/NZS5601.1 Clause 6.9.3.

2. Run exhaust flue and air intake flue as required Maximum run 8.5m. Flues can be run next to each other. Maintain clearances to combustibles.

3. Insulation Instructions-

   Exhaust flue must be insulated using 25mm glass wool pipe insulation as supplied by Glen Dimplex Australia.
   Insulation must be fitted to exhaust (hot side only).
   Insulation must start as close to appliance as possible (within 300mm).
   Insulation must finish as close to discharge as possible (within 300mm).
   Insulation must run around bends.
   Insulation to be taped to ensure no gaps.
   Insulation may be fitted while running flue or at final stage of installation.
   (shown at flue stage in Instructions)

4. Connection to appliance

Cut tube to length where required.

Ensure ends are burr free and round, test fit flue will slide over connection.

Recommended Silicon – Non-acetic, neutral cure 200°C or higher temperature rated.

Bostik RTV 926 or similar.

Apply an 8mm thick silicon bead fully around heater connection approx. 10mm from the top.

Apply an 8mm silicon bead fully around the inside of the flue end (heater connection end)

Fit flue clamp over flue (loosely).

Slide flue onto connection spigot fully.

Tighten clamp fully.

Wipe excess silicon, visually check connection to ensure connection is fully sealed

5. Repeat above with air intake flue pipe to heater connection.

6. Clip flues as required to provide adequate support.

7. Connection to wall mounted fan terminal.

Remove cover from fan terminal.

Cut flue exhaust tube (hot tube) to length (Approximately flush with wall exit). Connection plate will sit against wall.

Cut Air intake flue.

Ensure ends are burr free and round, test fit flue will slide over connection.

Pull flue through approx. 100mm (will be pushed back once terminal is fitted).

Feed power cable through wall and into wall terminal.

Apply an 8mm silicon bead fully around the inside of the flue end (heater connection end)

Fit flue clamp over flue (loosely).

Slide flue onto connection spigot fully. Tighten clamp fully.

Wipe excess silicon, visually check connection to ensure connection is fully sealed.

Feed air intake flue pipe through location spigot and fit retaining screw.

Mount flue terminal to wall.

Fit flue exhaust insulation

Insulated with 25mm foil faces glasswool pipe insulation, as supplied by Glen Dimplex Australia.

Insulation must start as close to the gas space heater as possible
(Only exhaust flue is to be insulated)

Insulation to be fully closed and sealed along length.

Bends where practical should be insulated, by cutting the insulation into segments and taping together.

Joins can be taped together using aluminum foil self adhesive tape.

Insulation may be fitted prior and after the inline powerflue fan.

Failure to fit insulation on the exhaust flue may result in condensation failures with the appliance.

Connect power cable connector.

Fit cable clamp to cable.

Fit front cover.

5M-8.5M
ROOFTOP TERMINATION WITH EXTERNAL MOTOR

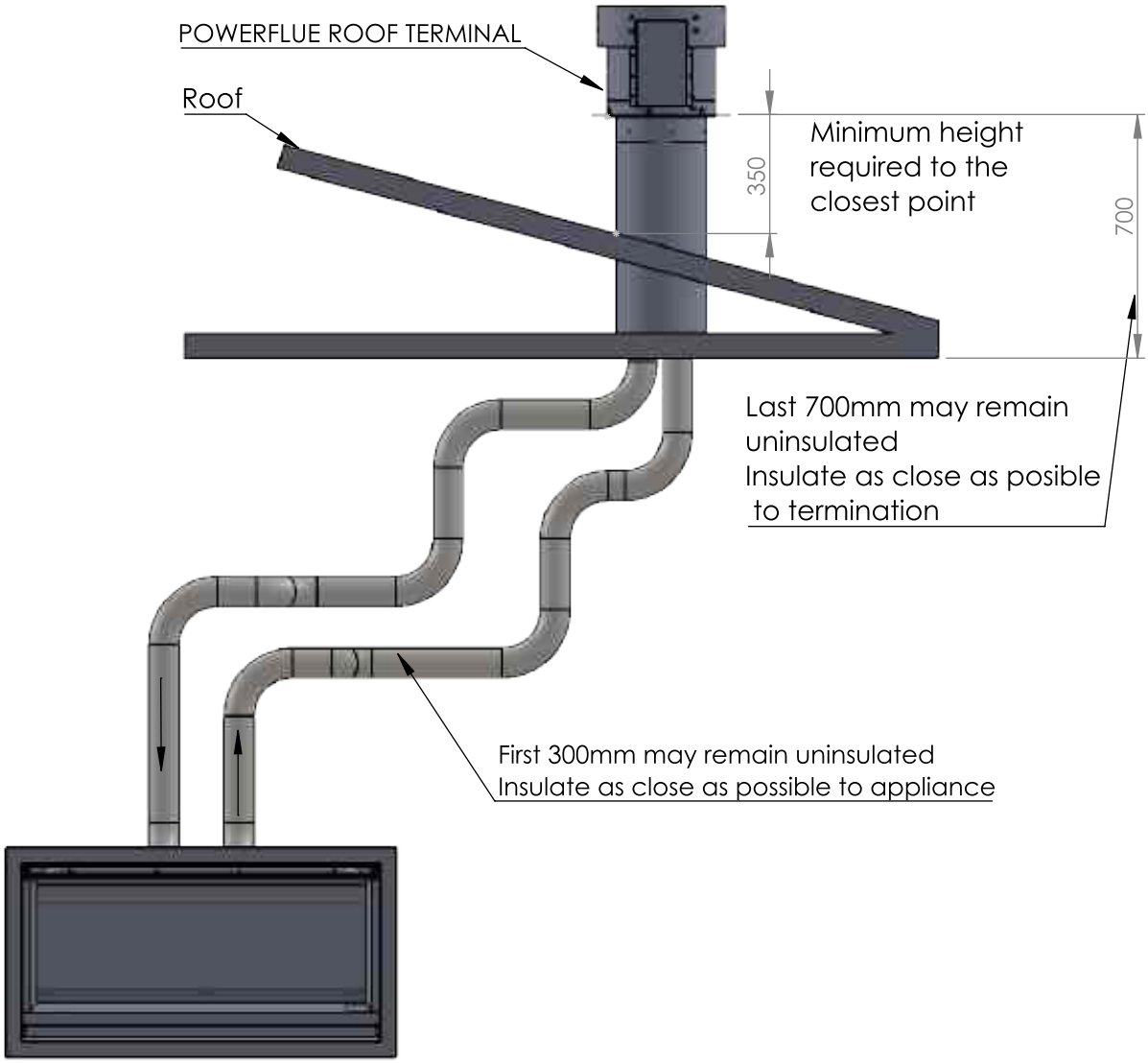

Setup with external rooftop termination

Maximum 8.5m flue length

Rooftop termination

1. Rooftop fan module – Terminal must be installed with clearances as specified by AS/NZS 5601.1 Clause 6.9.3

2. Run exhaust flue and air intake flue as required

3. **Maximum 8.5m flue length.** Flues can be run next to each other. Maintain the required clearances to combustibles.

4. Insulation Instructions-

   Exhaust flue must be insulated using 25mm glass wool pipe insulation as supplied by Glen Dimplex Australia.
   Insulation must be fitted to exhaust (hot side only).
   Insulation must start as close to appliance as possible (within 300mm).
   Insulation must finish as close to discharge as possible (within 300mm).
   Insulation must run around bends.
   Insulation to be taped to ensure no gaps.
   Insulation may be fitted while running flue or at final stage of installation.
   (shown at flue stage in Instructions)

On the heater connection end - Fit clamp loosely & apply silicon inside the pipes. Apply an 8mm silicon bead fully around the inside of the flue and on the heater spigot. Smear the silicon around the spigot and pipe.

Recommended Silicon – Non-acetic, neutral cure 200°C or higher temperature rated. Bostik RTV 926 or similar.

Slide flue onto connection spigot fully. Tighten clamp fully. Wipe excess silicon, visually check connection to ensure connection is fully sealed.

Repeat above with air intake flue pipe to heater connection.

Clip flues as required to provide adequate support.

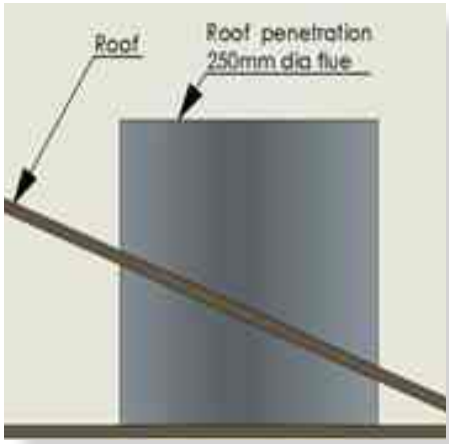

Insert the roof penetration and fix firmly to the roof structure using appropriate supports.

The roof penetration flue is a 250mm rigid flue.

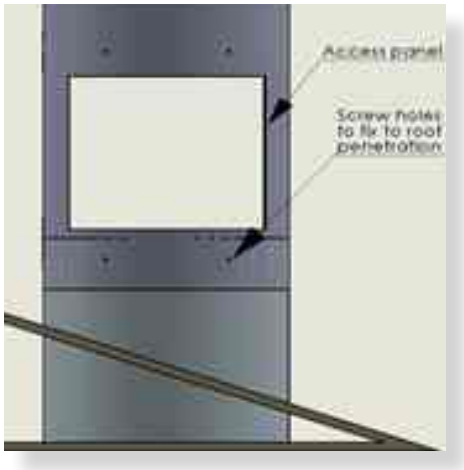

Fit the access panel to the roof penetration.

Use the screw holes fix the access panel to the roof penetration.

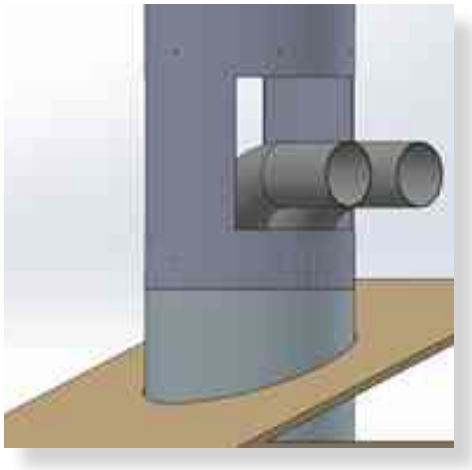

Run flue pipes through the access cut outs before fitting the termination on for ease of installation.
(The picture is a reference only. Take care not to flex/ bend the pipe too sharply and risk slitting the pipe)

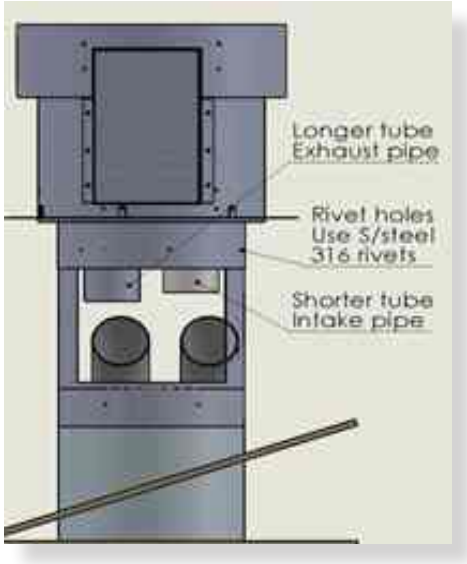

Fit the termination on to the access panel and match the rivet holes to rivet the termination to the access panel.

Use only the rivets provided.

On the termination end - Fit clamp loosely & apply silicon inside the pipes. Apply an 8mm silicon bead fully around the inside of the flue and on the flue spigot. Smear smoothly around the surfaces.

Recommended Silicon – Non-acetic, neutral cure 200°C or higher temperature rated. Bostik RTV 926 or similar.

Slide flue onto connection spigot fully. Tighten clamp fully. Wipe excess silicon, visually check connection to ensure connection is fully sealed.

Ensure that the pipes are connected correctly and are not inverted.

Use the labels to identify exhaust and intake spigots

Connect the fan power cable from the appliance to the termination.

Ensure the cable is clamped only to the intake pipe to secure the cable from hanging loose & touching the hot flue gases pipe.

Use the clamp provided. The clamp can be opened like a collar and fitted around on the flue.

Fit flue exhaust insulation.

Insulated with 25mm foil faces glasswool pipe insulation within 0.3m of each end of flue, as supplied by Glen Dimplex Australia.

Insulation must start as close to the gas space heater as possible
(Only exhaust flue is to be insulated)

Insulation to be fully closed and sealed along length.

Bends were practical should be insulated, by cutting the insulation into segments and taping together.

Joins can be taped together using aluminum foil self adhesive tape.

Insulation must be fitted prior and after the inline powerflue fan.

Failure to fit insulation on the exhaust flue may result in condensation failures with the appliance.

Flex collar and fit around the access panel. Socket the collar all the way up close to the air intake slots Ensure there is a rubber seal top and bottom of the collar.

Use only the screws provided to tightly fit the collar to seal the access panel.

COMMISSIONING PROCEDURE

Once the fire is installed:

1. Install media.
2. Check for gas leaks.
3. Connect powerflue module loom to fan control unit.
4. Carry out the lighting procedure.
5. Check burner pressures and adjust as per Dataplate.
6. Fit access cover and trim.
7. Handover instructions to owner.
8. Instruct owner on how to operate the fireplace safely.
9. Instruct owner how to isolate appliance in an emergency.

MEDIA INSTALLATION

PLEASE NOTE: not all media options shown are available for sale. Refer to Glen Dimplex Australia for available options.

GENERAL INSTALLATION NOTE

Lay media in a random arrangement along the entire length of the burner. Refer specific instructions below for each media type. Media where across the burner should be laid in a criss cross pattern along the full length of the burner. Do not place media along the burner channel / blocking the burner channel. Do not over stack media at one end.

Incorrect Media Installation

Correct Media Installation

IMPORTANT

Do not cover or block pilot area.

Pebbles

- Appliance is supplied with default aeration setting for the Driftwood media. If fitting Pebbles media, aeration setting will need to change as per size and specification.
- Lay large pebble media in a random arrangement behind and infront of the burner channel.
- Avoid smothering the burner channel.
- Pebbles should appear as a random mix and not be stacked more than 2 high in a few spots.
- Ensure media is not heaped in areas, spread evenly along.
- Do not add extra media, or combine media types.
- Only the approved supplied media is to be used.
- Refer to Glen Dimplex for technical advice regarding media.
- Do not cover pilot area.
- Do not overfill with media above the pilot cover level.
- Ensure the pilot flame is not impinged by media and can cross light the main burner.
- Do not use any other media than as supplied and recommended by the manufacturer.
- Use of other media may result in explosive media which may cause injury or damage.

TYPICAL SETUP

Media must be laid out from corner to corner of the firebox. Media should be placed behind and infront of the media channel. Avoid smothering the burner.

Driftwood

- Appliance is supplied with default aeration setting for the Snow Gum media. If fitting Driftwood media, aeration setting will need to change as per size and specification.
- Start media placement from a corner with logs over side plate.
- Lay driftwood media in an arrangement as shown in this section along the entire length of the burner.
- Avoid smothering the burner channel.
- Ensure media is not heaped in areas, spread evenly along.
- Do not add extra media, or combine media types.
- Only the approved supplied media is to be used.
- Each size of the Inspire has their own set, do not mismatch the media sets.
- Refer to Glen Dimplex for technical advice regarding media.
- Do not cover pilot area.
- Do not overfill with media above the pilot cover level.
- Ensure the pilot flame is not impinged by media and can cross light the main burner.
- Do not use any other media than as supplied and recommended by the manufacturer.
- Use of other media may result in explosive media which may cause injury or damage.

TYPICAL SETUP

Arrangement Instruction

Media must be laid out from corner to corner of the firebox. Start media placement from a corner by placing the first log over the side cover plate.

CRITICAL ARRANGEMENTS TO AVOID

Do not place logs directly over the channel, blocking large portions of the channel.

Do not over stack (triple stack logs).

Arrangement Instruction
INS700

Screw in place the brackets as indicated to lift the logs in the pre-drilled holes.

2 brackets need to be placed on the INS700.

Place the log on the bracket as shown.

Place the log on the bracket as shown.

Place coals on the side and infront of the logs as shown. Do not place any coals on the burner channel.

Arrangement Instruction
INS900 and INS1100

Screw in place the brackets as indicated to lift the logs in the pre-drilled holes.

3 brackets need to be placed on the INS700.

Place the log on the bracket as shown.

Place the bracket as indicated to lift the logs.

Place the log on the bracket as shown.

Proceed to step 17 directly for INS900 setup.

Place the log on the bracket as shown.

Place coals on the side and infront of the logs as shown. Do not place any coals on the burner channel.

Logset inorder of placement for INS900

Logset inorder of placement for INS 1100

Snow Gum Media

- Start media placement with logs provided as indicated in the arrangement section of the fireplace model type.
- Avoid smothering the burner channel.
- Ensure media is not heaped in areas, spread evenly along.
- Do not add extra media, or combine media types.
- Only the approved supplied media is to be used.
- Each size of the Inspire has their own set, do not mismatch the media sets.
- Place coals in front of the burner channel as indicate in the sections to follow.
- Refer to Glen Dimplex for technical advice regarding media.
- Do not cover pilot area.
- Do not overfill with media above the pilot cover level.
- Ensure the pilot flame is not impinged by media and can cross light the main burner.
- Do not use any other media than as supplied and recommended by the manufacturer.
- Use of other media may result in explosive media which may cause injury or damage.

TYPICAL SETUP

Arrangement Instruction
INS700

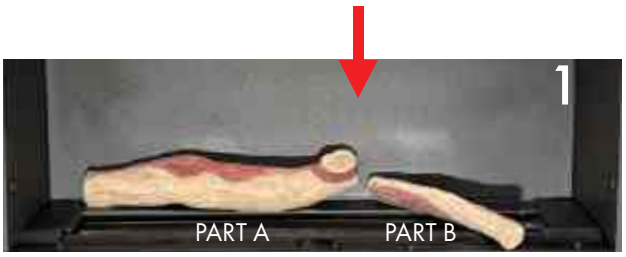

Place log 1 as indicated. Make note of the placement as per above and note that the log comes in 2 parts.

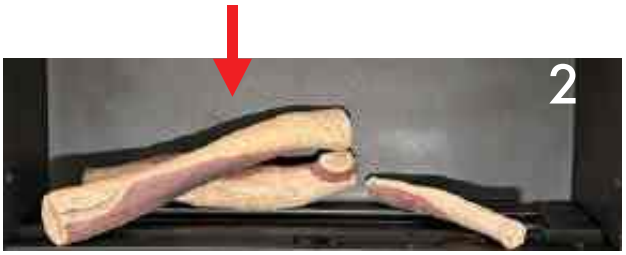

Please note how the 3rd log is arranged as per the screw in the picture above.

Place coals on the side and infront of the logs as shown. Do not place any coals on the burner channel.

Arrangement Instruction
INS900

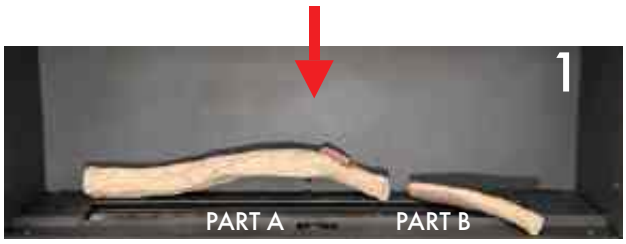

Place log 1A and 1B as indicated. Make note of the placement as per above.

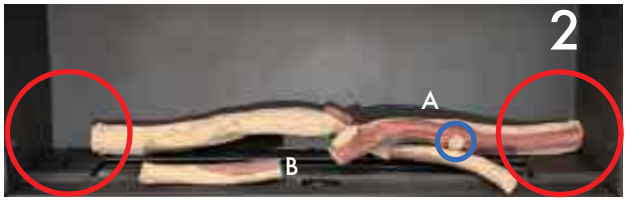

Please note how the two logs are spaced against the firebox walls as above.

Log 2A can be identified by the marking as indicated by the blue circle above.

Place coals on the side and infront of the logs as shown. Do not place any coals on the burner channel.

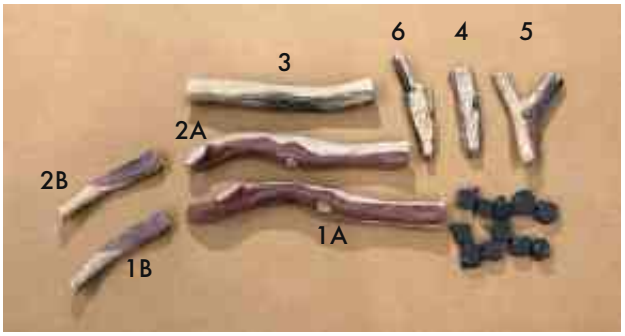

Arrangement Instruction
INS1100

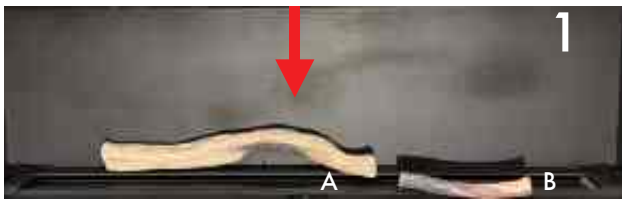

Place log 1 as indicated. Make note of the placement as per above. Log 1 and 2 are supplied as part A and B.

Please note how log 1 and 2 are placed in the centre of the firebox. Measure as above the distance from the firebox wall if required.

Log 2 can be identified by the marking as indicated by the blue circle above.

End of Log 1 to firebox wall - 150mm
End of Log 2 to firebox wall - 120mm

Please note how the 4th log is arranged in between log 1 and 2.

Please note how Log 7 is placed over Log 3.

Place coals on the side and infront of the logs as shown. Do not place any coals on the burner channel.

CONVERSION DETAILS

Refer to the detailed steps shown in each section relevant to gas conversion-

- Trim removal
- Inner door removal
- Gas valve replacement (Fitment of correct gas valve to suit gas type)
- Pilot injector replacement (Fitment of correct pilot injector to suit gas type)
- Burner removal / replacement (Fitment of correct aeration cap to suit gas type)
- Burner injector removal / replacement (Fitment of correct burner injector to suit gas type)

PART A - TRIM AND DOOR REMOVAL & REPLACEMENT

1. Turn off mains power to appliance.

2. Remove trim (4 screws) – NOTE EARTH WIRE STILL TO BE DISCONNECTED – TRIM MAY NOT BE ABLE TO BE FULLY LOWERED

3. Disconnect earth wire (Lower LH corner of trim)

4. Remove door

REFITTING DOOR

1. Ensure glass seal is fully bonded to metal frame (check entire perimeter of glass).

2. Ensure door seal is sitting on glass and held in place.

3. Ensure glass is sitting firm against seal with no gaps or bows.

4. Refit door.

5. Slightly lift door -Refit door screws. Note – tighten screws hand tight.

6. Refit earth wire to trim and refit trim to appliance.

7. Refit the trim with 4 screws

Part B - GAS VALVE REMOVAL

1. Turn main power supply off to appliance. (Isolate appliance)

2. Turn gas isolation valve to off

3. Remove spark wire from ignitor

4. Disconnect gas tube from isolation valve (main valve side)

5. Remove pilot tube from pilot assembly (undo 10mm brass nut) – CARE MUST BE TAKEN TO PREVENT DAMAGE TO SPARK ROD

6. Mark air pressure switch hoses to enable correct connection, disconnect hoses from air pressure switch

7. Disconnect flame rod sensor from ignition pack

8. Disconnect electrical tray earth eyelet

9. Undo tray holding wingnuts (2 off)

10. Disconnect gas pipe from valve outlet.

11. Disconnect valve wires from valve

12. Remove valve from electrical tray (3 retaining screws)

13. Remove gas pipe connections from valve and fit to correct gas type valve.

14. Reattach valve to mounting plate.

15. Reconnect valve wires from ignition pack.

16. Refit tray assembly and holding wingnuts

17. Reconnect burner gas pipe to the valve outlet and tighten

18. Connect gas pipe to isolation valve and tighten.

19. Connect pilot tube and tighten

20. Ensure all connections are tight.

21. Connect gas and leak test connections upto the gas valve.

22. Connect flame rod sensor

23. Connect air pressure switch hoses

24. Connect sparker wire

27. Adjust pilot pressure adjustment screw as per the specific instructions above

Nat Gas - ¾ turnout
LPG - 1 turnout

Screw fully in and then wind out (anti clockwise) to suit gas type.

28. Perform correct operation check

Part C - PILOT AND PILOT INJECTOR CHANGE

1. Remove trim and door as per above instructions

2. Remove media from firebox.

3. Remove burner side covers.

4. Remove front media support

5. Remove lower front media support (screws / nuts from underneath firebox)

6. Pilot assembly can now be removed. – If removed a bead of silicon is to be applied to base of pilot assembly when refitting to ensure airtight seal.

FOR CONVERSION - PILOT ASSY DOES NOT NEED TO BE REMOVED

7. Remove clip from pilot head assembly

8. Lift out pilot head

9. Using 4mm Allen key unscrew pilot injector

10. Replace injector with correct gas type and tighten NAT GAS (No groove) LPG (groove on lower area)

11. Refit pilot head – NOTE location notch on pilot head

12. Refit clip

13. Refit pilot shield (to sit flush against burner

14. Fit front media supports back into place.

15. Fit burner side covers.

Part D - BURNER, BURNER AERATION AND MAIN INJECTOR REPLACEMENT

1. Remove trim and door as per above instructions

2. Remove media from firebox.

3. Remove burner side covers.

4. Remove front media support

5. Loosen retaining nut from end of burner

6. Remove bracket retaining screws and lift / slide burner out.

7. Replace aeration cap with correct cap to suit gas type and media type.

8. Remove injector from holder.

9. Fit new injector – push firmly fully into holder.

10. Fit olive onto injector, fit nut and push injector firmly back onto socket and tighten. Injector should protrude from nut by approx. 7mm.

11. Unclip pilot head and lift off.

12. Refit burner – Rotate burner to ensure burner is in its location slot. Replace holding nut at end of burner and tighten to secure the burner. Burner sits on and approximate angle of 15deg tilted forward.

13. Burner aeration cap to sit against injector brass nut.

14. Refit burner end bracket and tighten screws.

15. Tighten end burner nut

16. Refit front media support

17. Refit burner side covers.

18. Refit media as per media setup (refer instructions)

19. Refit firebox door.

Part E - AERATION CAP CHANGE

1. Remove trim and door as per above instructions

2. Remove media from firebox.

3. Remove burner side covers.

4. Remove front media support

5. Loosen retaining nut from end of burner

6. Remove bracket retaining screws and lift / slide burner out.

7. Replace aeration cap with correct cap to suit gas type and media type.

8. Refit burner – Rotate burner to ensure burner is in its location slot. Replace holding nut at end of burner and tighten to secure the burner. Burner sits on and approximate angle of 15deg tilted forward.

9. Burner aeration cap to sit against injector brass nut.

10. Refit burner end bracket and tighten screws.

11. Tighten end burner nut

12. Refit front media support

13. Refit burner side covers.

14. Refit media as per media setup (refer instructions)

15. Refit firebox door.

PARTS LIST

Parts	Picture
Valve	
SIT Pilot assembly	
Injector	
Burner	
Remote control	
SIT Ignition pack/gas control	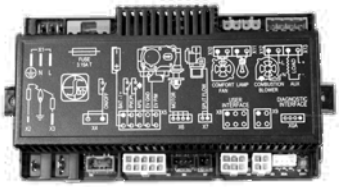

APPENDIX 1- FLUE TERMINATION

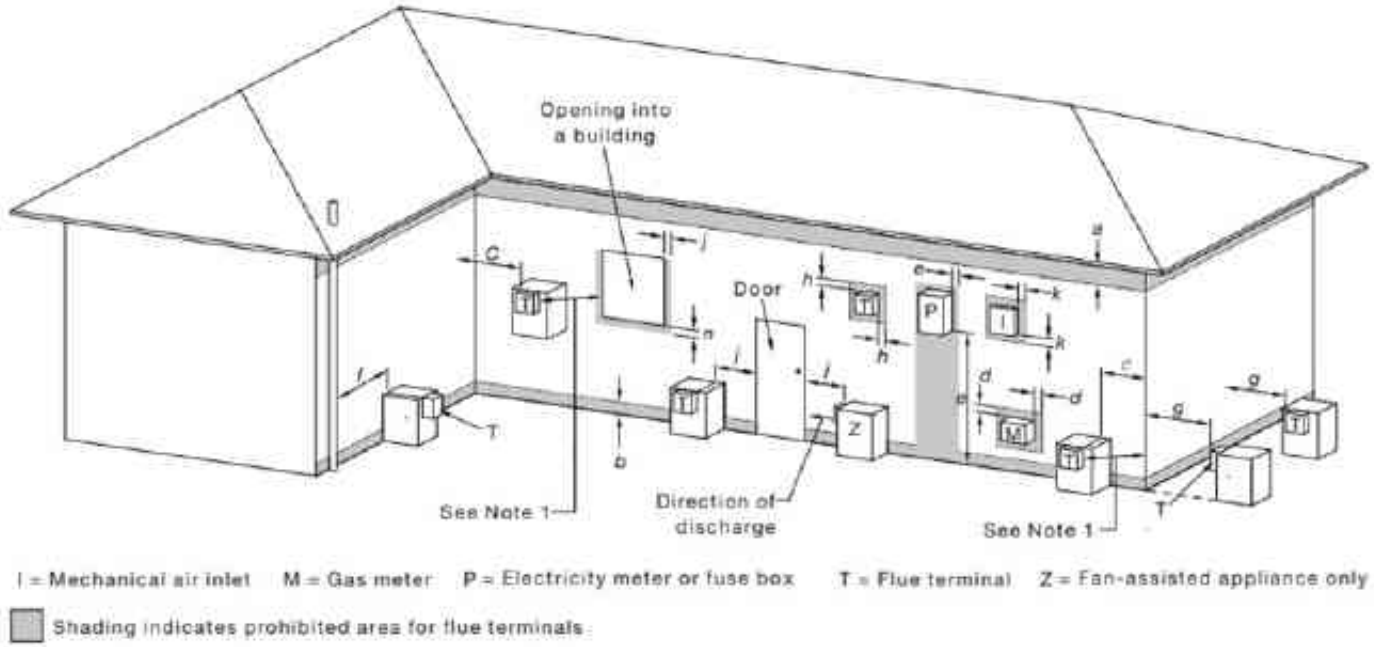

FIGURE 6.2 (in part) LOCATION OF FLUE TERMINALS OF BALANCED FLUE, ROOM-SEALED, FAN-ASSISTED OR OUTDOOR APPLIANCES

Ref.	Item	Minimum clearances mm	
		Natural draught	Fan assisted
a	Below eaves, balconies and other projections:		
	Appliances up to 50 MJ/h input	300	200
	Appliances over 50 MJ/h input	500	300
b	From the ground, above a balcony or other surface *	300	300
c	From a return wall or external corner *	500	300
d	From a *gas meter* (M) (see Note 5) (see Clause 5.11.5.9 for vent terminal location of regulator) (see Table 6.7 for New Zealand requirements)	1 000	1 000
e	From an electricity meter or fuse box (P)† (see Note 5)	500	500
f	From a drain pipe or soil pipe	150	75
g	Horizontally from any building structure * or obstruction facing a terminal	500	500
h	From any other *flue terminal*, cowl, or combustion air intake *	500	300
j	Horizontally from an openable window, door, non-mechanical air inlet, or any other opening into a building with the exception of sub-floor ventilation:		
	Appliances up to 150 MJ/h input*	500	300
	Appliances over 150 MJ/h input up to 200 MJ/h input*	1 500	300
	Appliances over 200 MJ/h input up to 250 MJ/h input*	1 500	500
	Appliances over 250 MJ/h input*	1 500	1 500
	All fan-assisted *flue appliances*, in the direction of discharge	—	1 500
k	From a mechanical air inlet, including a spa blower	1 500	1 000
n	Vertically below an openable window, non-mechanical air inlet, or any other opening into a building with the exception of sub-floor ventilation:		
	Space heaters up to 50 MJ/h input	150	150
	Other *appliances* up to 50 MJ/h input	500	500
	Appliances over 50 MJ/h input and up to 150 MJ/h input	1 000	1 000
	Appliances over 150 MJ/h input	1 500	1 500

* Unless *appliance* is *certified* for closer installation.

† Prohibited area below electricity meter or fuse box extends to ground level.

NOTES:

1 Where dimensions *c*, *j* or *k* cannot be achieved an equivalent horizontal distance measured diagonally from the nearest discharge point of the terminal to the opening may be deemed by the *Technical Regulator* to comply.

2 See Clause 6.9.4 for restrictions on a *flue terminal* under a covered area.

3 See Figure J3 for clearances required from a *flue terminal* to an *LP Gas cylinder*. A *flue terminal* is considered to be a source of ignition.

4 For *appliances* not addressed above acceptance should be obtained from the *Technical Regulator*.

5 Minimum clearances *d* and *e* also apply to any combustion air intake openings of appliances.

FIGURE 6.2 (in part) LOCATION OF FLUE TERMINALS OF BALANCED FLUE, ROOM-SEALED, FAN-ASSISTED OR OUTDOOR APPLIANCES

APPENDIX 2- WIRING DIAGRAMS

SIT Gas Control Models

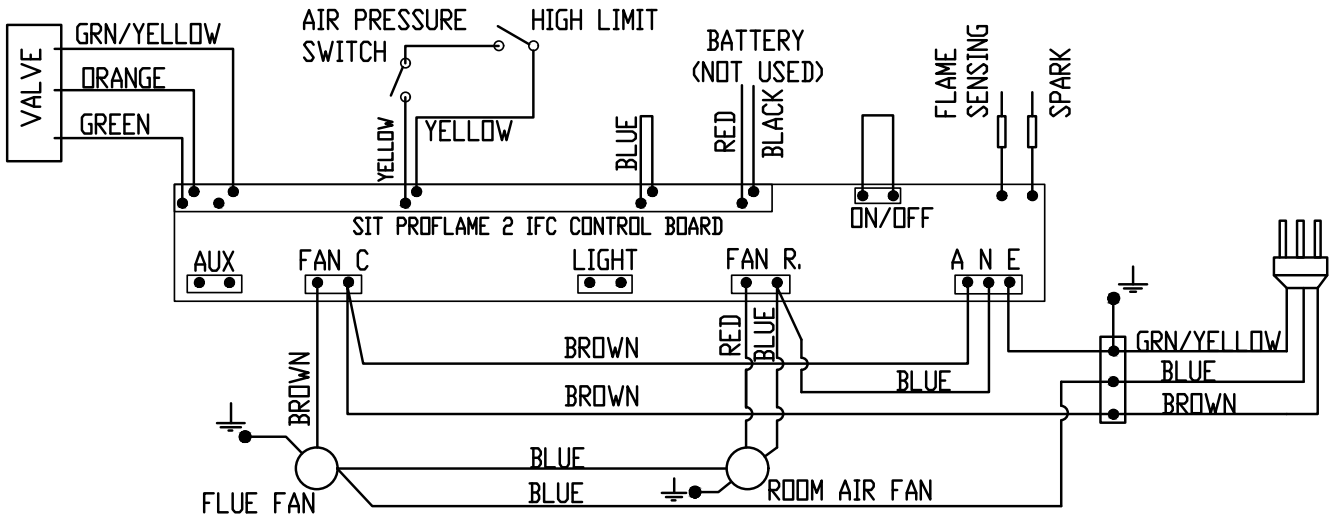

WARRANTY INFORMATION

The benefits provided to you under the following warranty are in addition to any other rights and remedies available to you under the law.

1. Warranty

If:

(a) during the first 15 years from the date of purchase (Firebox Warranty Period), there is a defect in the firebox of the Gas Burner; or

(b) during the first 2 years from the date of purchase (Parts Warranty Period), there is a defect in the gas valves or other parts of the Gas Burner, due to improper workmanship or material, Glen Dimplex will replace or repair the Gas Burner without charge. Any replacement product is warranted only for the time remaining on the original Firebox Warranty Period or the Parts Warranty Period as relevant.

2 . Registration

You must register to receive the benefit of this warranty by completing the warranty registration on our website (www.realflame.com.au) or completing and mailing the attached registration card within 30 days of purchase of your Gas Burner (or, if the Gas Burner is fitted to a new home, within 30 days of the date of settlement of purchase of such new home).

3 . Exclusions

Glen Dimplex is not obliged to replace or repair the Gas Burner under clause 1 if:

(a) it has been improperly stored, installed, connected, used, operated or repaired, or damaged, abused, tampered with, altered (without our written approval), or not maintained in strict accordance with our installation and operating instructions; or

(b) it has been installed in an outdoor setting.

4 . Limit of Liability

The warranty provided under this warranty is limited to replacement or repair of the Gas Burner only, at our option. To the extent permitted by law, Glen Dimplex excludes liability for consequential loss or any other loss or damage caused to property or persons arising from any cause whatsoever, and damage arising from normal wear and tear.

5 . Claiming under the Warranty

In order to claim under this warranty you must, within the Firebox Warranty Period or the Parts Warranty Period (as relevant), contact Glen Dimplex, providing the original proof of purchase and the details below:

Supplier Name_____

Date Of Purchase / settlement of property if new home _____

Model / Serial Number_____

This warranty does not cover the cost of claiming under the warranty or transporting the Glen Dimplex Gas Burner to and from the supplier.

Our goods come with guarantees that cannot be excluded under the Australian Consumer Law. You are entitled to a replacement or refund for a major failure and for compensation for any other reasonably foreseeable loss or damage. You are also entitled to have the goods repaired or replaced if the goods fail to be of acceptable quality and the failure does not amount to a major failure.

If you would like to speak to someone about your Gas Burner or claiming under this warranty, please contact the Service Warranty Desk on 1300 554 155.

Glen Dimplex Australia Pty Ltd
ACN 69 118 275 460
Head Office: 8 Lakeview Drive, Scoresby 3179
Telephone: (03) 8706 2000 Facsimile: (03) 8706 2001

Website:

www.realflame.com.au

Telephone:

AU: 1300 554 155

© Glen Dimplex.
All rights reserved. Material contained in this publication may not be reproduced in whole or in part, without prior permission in writing from Glen Dimplex.